Manualslib.com - The Global Manuals Library

JVC AV28CH1EUS SERVICE MANUAL

Quick Links

Specifications
Features

Table of Contents

Table of Contents
colour television
SPECIFICATIONS
SAFETY PRECAUTIONS
FEATURES
MAIN DIFFERENCE LIST
SPECIFIC SERVICE INSTRUCTIONS
replacement of chip component
SERVICE ADJUSTMENTS
service menu
Other ManualsLib Projects

JVC

SERVICE MANUAL

COLOUR TELEVISION

BASIC CHASSIS
MF

AV28CH1EUS
AV28CH1EUB

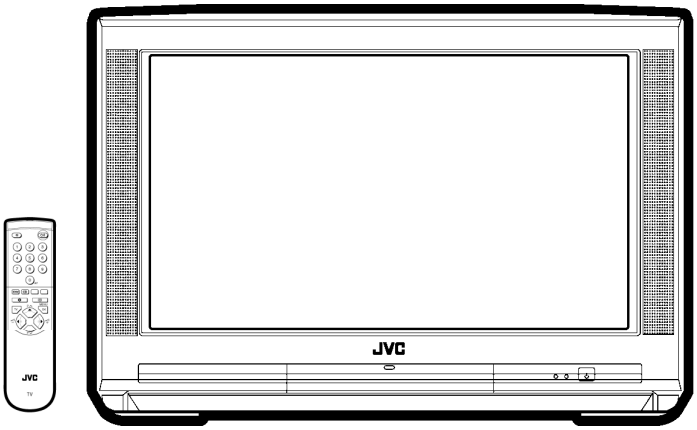

CONTENTS

■ SPECIFICATIONS ····· 2
■ SAFETY PRECAUTIONS ····· 4
■ FEATURES ····· 5
■ MAIN DIFFERENCE LIST ····· 5
■ SPECIFIC SERVICE INSTRUCTIONS ····· 6
■ SERVICE ADJUSTMENTS ····· 12
■ PARTS LIST ····· 31

★ STANDARD CIRCUIT DIAGRAM ····· 2-1

COPYRIGHT © 2002 VICTOR COMPANY OF JAPAN, LTD.

No. 51944
Mar. 2002

SPECIFICATIONS

Item	Content
	AV28CH1EUS / AV28CH1EUB
Dimensions (W × H × D) **Mass**	725mm × 480mm × 496mm 34.7kg
TV RF System	CCIR (B/G,D/K,I,L, L')
Colour System	PAL / SECAM / NTSC (Only in EXT mode)
Stereo System	A2 (B/G,D/K)/ NICAM(B/G,I,D/K,L)
Teletext System	FLOF (Fastext) TOP (German system) WST(World Standard system)
Receiving Frequency **VHF** **UHF** **Intermediate Frequency** **VIF Carrier** **SIF Carrier**	 47MHz ～ 470MHz 470MHz ～ 862MHz 38.9MHz (B/G, I ,L)/ 33.95MHz (L') 33.4MHz (5.5MHz:B/G) / 32.9MHz (6.0MHz:I) / 32.4MHz (6.5MHz:L, D/K) / 40.45MHz (6.5MHz:L')
Colour Sub Carrier Freq. **PAL** **SECAM** **NTSC**	 4.43MHz 4.40625MHz/4.25MHz 3.58MHz / 4.43MHz
Power Input **Power Consumption** **Aerial Input Term**	AC 230V , 50Hz 165W(Max) / 112W(Avg), standby : 2.8W 75Ω unbalanced, Coaxial
Picture Tube **High Voltage**	Visible size : 66cm, Measured diagonally $30.0kV^{+1kV}_{-1.5kV}$ (at zero beam current)
Speaker **Audio Output**	(10cm × 3cm) oval type ×2 5W + 5W
EXT-1/EXT-2/EXT-3 **(Input / Output)** **S / Video**	21-pin Euro connector (SCART socket) Y : 1Vp-p POSITIVE (Negative sync Provided, when terminated with 75Ω) C : 0.3Vp-p (Burst signal, when terminated with 75Ω)
EXT-4 (Input) **Video** **Audio (L/R)** **S / Video**	1Vp-p 75Ω (RCA pin jack) 500mVrms(-4dBs), High Impedance (RCA pin jack) Y : 1Vp-p POSITIVE (Negative sync Provided, when terminated with 75Ω) C : 0.3Vp-p (Burst signal, when terminated with 75Ω)
AUDIO OUT (Variable) **Headphone jack**	0～1Vrms, Low Impedance (RCA pin jack × 2) Stereo mini jack (φ 3.5mm)
Remote Control Unit	RM-C54H (AAA/R03 dry battery × 2) : (AV28CH1EUS) / RM-C50(AAA/R03 dry battery × 2) : (AV28CH1EUB)

Design & specifications are subject to change without notice.

■21-pin Euro connector (SCART socket) : EXT-1 / EXT-2 / EXT-3

(P-P= Peak to Peak, B-W= Blanking to white peak)

Pin No.	Signal Designation	Matching Value	EXT-1	EXT-2	EXT-3
1	AUDIO R output	500mVrms(Nominal), Low impedance	○ (TV OUT)	○ (LINE OUT)	NC
2	AUDIO R input	500mVrms(Nominal), High impedance	○	○	○
3	AUDIO L output	500mVrms(Nominal), Low impedance	○ (TV OUT)	○ (LINE OUT)	NC
4	AUDIO GND		○	○	○
5	GND (B)		○	○	○
6	AUDIO L input	500mVrms(Nominal), High impedance	○	○	○
7	B input	700mV_{B-W}, 75Ω	○	○	NC
8	FUNCTION SW (SLOW SW)	Low : 0-3V, High : 8-12V, High impedance	○	○	○
9	GND (G)		○	○	○
10	SCL3		NC	○	NC
11	G input	700mV_{B-W}, 75Ω	○	○	NC
12	SDA3		NC	○	NC
13	GND (R)		○	○	○
14	GND (Y_S)		○	NC	NC
15	R / C input	R : 700mV_{B-W}, 75Ω C : 300mV_{P-P}, 75Ω	○ (only R)	○	○ (only C)
16	Ys input	Low : 0 - 0.4, High : 1 - 3V, 75Ω	○	NC	NC
17	GND(VIDEO output)		○	○	○
18	GND(VIDEO input)		○	○	○
19	VIDEO output	1V_{P-P}(Negative going sync), 75Ω	○ (TV)	○ (LINE OUT)	NC
20	VIDEO / Y input	1V_{P-P}(Negative going sync), 75Ω	○	○	○
21	COMMON GND		○	○	○

[Pin assignment]

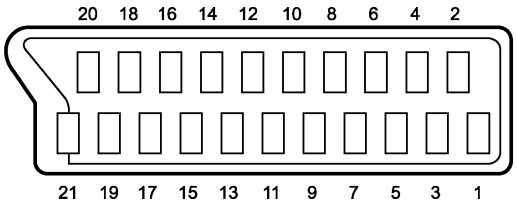

SAFETY PRECAUTIONS

1. The design of this product contains special hardware, many circuits and components specially for safety purposes. For continued protection, no changes should be made to the original design unless authorized in writing by the manufacturer. Replacement parts must be identical to those used in the original circuits. Service should be performed by qualified personnel only.

2. Alterations of the design or circuitry of the products should not be made. Any design alterations or additions will void the manufacturer's warranty and will further relieve the manufacturer of responsibility for personal injury or property damage resulting therefrom.

3. Many electrical and mechanical parts in the products have special safety-related characteristics. These characteristics are often not evident from visual inspection nor can the protection afforded by them necessarily be obtained by using replacement components rated for higher voltage, wattage, etc. Replacement parts which have these special safety characteristics are identified in the parts list of Service manual. **Electrical components having such features are identified by shading on the schematics and by (⚠) on the parts list in Service manual.** The use of a substitute replacement which does not have the same safety characteristics as the recommended replacement part shown in the parts list of Service manual may cause shock, fire, or other hazards.

4. **Don't short between the LIVE side ground and ISOLATED (NEUTRAL) side ground or EARTH side ground when repairing.**
   Some model's power circuit is partly different in the GND. The difference of the GND is shown by the LIVE : (⊥) side GND, the ISOLATED(NEUTRAL) : (⏚) side GND and EARTH : (⏚) side GND. Don't short between the LIVE side GND and ISOLATED(NEUTRAL) side GND or EARTH side GND and never measure with a measuring apparatus (oscilloscope etc.) the LIVE side GND and ISOLATED(NEUTRAL) side GND or EARTH side GND at the same time.
   If above note will not be kept, a fuse or any parts will be broken.

5. If any repair has been made to the chassis, it is recommended that the B1 setting should be checked or adjusted (See ADJUSTMENT OF B1 POWER SUPPLY).

6. The high voltage applied to the picture tube must conform with that specified in Service manual. Excessive high voltage can cause an increase in X-Ray emission, arcing and possible component damage, therefore operation under excessive high voltage conditions should be kept to a minimum, or should be prevented. If severe arcing occurs, remove the AC power immediately and determine the cause by visual inspection (incorrect installation, cracked or melted high voltage harness, poor soldering, etc.). To maintain the proper minimum level of soft X-Ray emission, components in the high voltage circuitry including the picture tube must be the exact replacements or alternatives approved by the manufacturer of the complete product.

7. Do not check high voltage by drawing an arc. Use a high voltage meter or a high voltage probe with a VTVM. Discharge the picture tube before attempting meter connection, by connecting a clip lead to the ground frame and connecting the other end of the lead through a 10kΩ 2W resistor to the anode button.

8. When service is required, observe the original lead dress. Extra precaution should be given to assure correct lead dress in the high voltage circuit area. Where a short circuit has occurred, those components that indicate evidence of overheating should be replaced. Always use the manufacturer's replacement components.

9. **Isolation Check**
   (Safety for Electrical Shock Hazard)
   After re-assembling the product, always perform an isolation check on the exposed metal parts of the cabinet (antenna terminals, video/audio input and output terminals, Control knobs, metal cabinet, screwheads, earphone jack, control shafts, etc.) to be sure the product is safe to operate without danger of electrical shock.

(1) **Dielectric Strength Test**
The isolation between the AC primary circuit and all metal parts exposed to the user, particularly any exposed metal part having a return path to the chassis should withstand a voltage of 3000V AC (r.m.s.) for a period of one second.
(. . . . Withstand a voltage of 1100V AC (r.m.s.) to an appliance rated up to 120V, and 3000V AC (r.m.s.) to an appliance rated 200V or more, for a period of one second.)
This method of test requires a test equipment not generally found in the service trade.

(2) **Leakage Current Check**
Plug the AC line cord directly into the AC outlet (do not use a line isolation transformer during this check.). Using a "Leakage Current Tester", measure the leakage current from each exposed metal part of the cabinet, particularly any exposed metal part having a return path to the chassis, to a known good earth ground (water pipe, etc.). Any leakage current must not exceed 0.5mA AC (r.m.s.).
However, in tropical area, this must not exceed 0.2mA AC (r.m.s.).

● **Alternate Check Method**
Plug the AC line cord directly into the AC outlet (do not use a line isolation transformer during this check.). Use an AC voltmeter having 1000 ohms per volt or more sensitivity in the following manner. Connect a 1500Ω 10W resistor paralleled by a 0.15μF AC-type capacitor between an exposed metal part and a known good earth ground (water pipe, etc.). Measure the AC voltage across the resistor with the AC voltmeter. Move the resistor connection to each exposed metal part, particularly any exposed metal part having a return path to the chassis, and measure the AC voltage across the resistor. Now, reverse the plug in the AC outlet and repeat each measurement. Any voltage measured must not exceed 0.75V AC (r.m.s.). This corresponds to 0.5mA AC (r.m.s.).
However, in tropical area, this must not exceed 0.3V AC (r.m.s.). This corresponds to 0.2mA AC (r.m.s.).

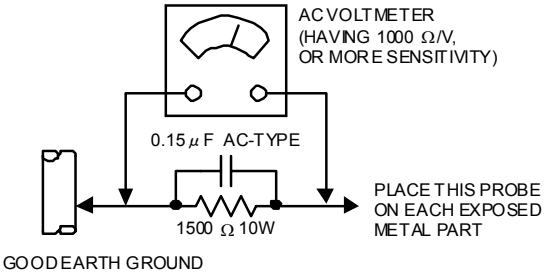

FEATURES

- New chassis design enable use of an interactive on screen control.
- The TELETEXT SYSTEM has a built-in FASTEXT (UK system), TOP (German system) and WST (world standard system) system.
- Because this TV unit corresponds to multiplex broadcast, users can enjoy music programs and sporting events with live realism. In addition, BILINGUAL programs can be heard in their original language.
- Users can make VCR dubbing of picture and sound by controlling the AV selector to select an optional source at the EXT-2 output shown in figure.

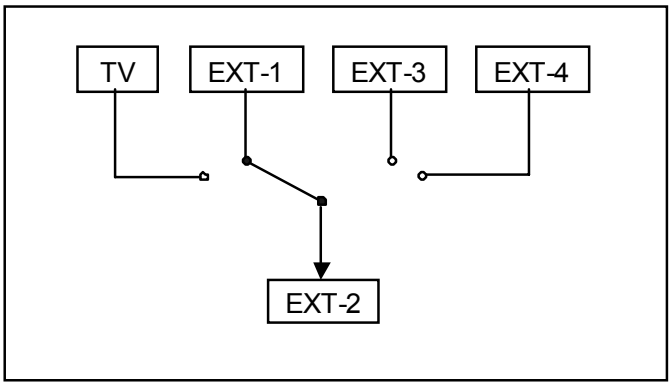

MAIN DIFFERENCE LIST

⚠	Model Name / Part Name	AV28CH1EUS	AV28CH1EUB
⚠	FRONT CABINET ASSY	LC10001-008C-U	LC10001-009B-U
⚠	DOOR	LC20001-010A-U	LC20001-012A-U
⚠	POWER KNOB	LC30104-010A-U	LC30104-012A-U
⚠	REAR COVER	LC1003-009B-U	LC10003-010B-U
	JVC MARK	LC40354-003A-U	LC40354-001C-U
⚠	RATING LABEL	LC11414-001A-U	LC11414-002A-U
	EURO LABEL	AEM1064-009-E	AEM1064-010-E
	REMOTE CONTROL UNIT	RM-C54H-1C	RM-C50-1C

SPECIFIC SERVICE INSTRUCTIONS

DISASSEMBLY PROCEDURE

REMOVING THE REAR COVER

1. Unplug the power cord.
2. Remove the 14 screws marked Ⓐ as shown in the Fig. 1.
3. Withdraw the rear cover toward you.

REMOVING THE CHASSIS

- After removing the rear cover.

1. Slightly raise the both sides of the chassis by hand and remove the two claws under the both sides of the chassis from the front cabinet.
2. Withdraw the chassis backward.
   (If necessary, take off the wire clamp, connectors etc.)

REMOVING THE AV TERMINAL BOARD

- After removing the rear cover.

1. Remove the 2 screws marked Ⓑ as shown in the Fig. 1.
2. Remove the claws marked Ⓒ under the CHASSIS as shown in Fig. 2.
3. Slightly in the direction of arrow Ⓓ as shown in Fig. 2.

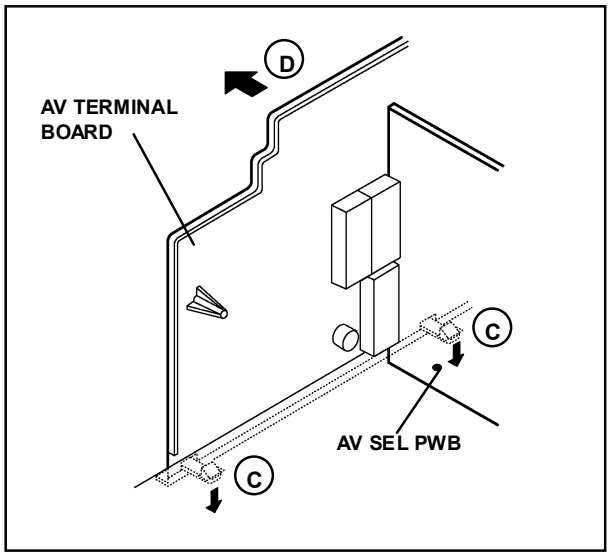

Fig. 2

REMOVING THE SPEAKER

- After removing the rear cover.

1. Remove the 2 screws marked Ⓔ as shown in Fig. 1.
2. Follow the same steps when removing the other hand speaker.

CHECKING THE PW BOARD

To check the back side of the PW Board.

1) Pull out the chassis. (Refer to REMOVING THE CHASSIS).
2) Erect the chassis vertically so that you can easily check the back side of the PW Board.

[CAUTION]

- When erecting the chassis, be careful so that there will be no contacting with other PW Board.
- Before turning on power, make sure that the wire connector is properly connected.
- When conducting a check with power supplied, be sure to confirm that the CRT EARTH WIRE (BRAIDED ASS'Y) is connected to the CRT SOCKET PW board.

WIRE CLAMPING AND CABLE TYING

1. Be sure to clamp the wire.
2. Never remove the cable tie used for tying the wires together.
   Should it be inadvertently removed, be sure to tie the wires with a new cable tie.

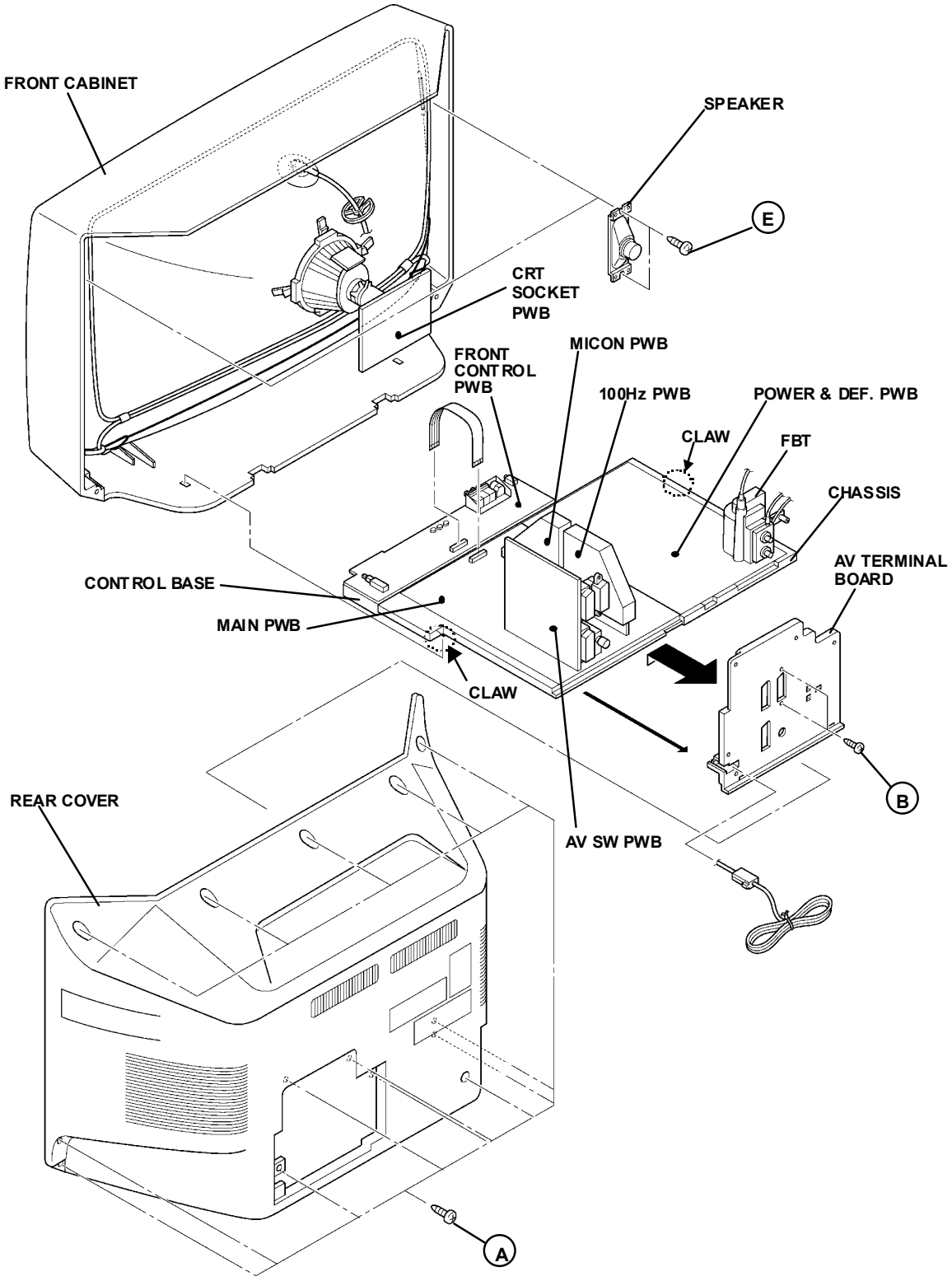
FRONT CABINET
SPEAKER
E
CRT SOCKET PWB
MICON PWB
FRONT CONTROL PWB
100Hz PWB
POWER & DEF. PWB
CLAW
FBT
CHASSIS
AV TERMINAL BOARD
CONTROL BASE
MAIN PWB
CLAW
B
REAR COVER
AV SW PWB
A

Fig. 1

REMOVING THE CRT

* Replacement of the CRT should be performed by 2 or more persons.

- After removing the cover, chassis etc.,

1. Putting the CRT change table on soft cloth, the CRT change table should also be covered with such soft cloth (shown in Fig.3).
2. While keeping the surface of CRT down, mount the TV set on the CRT change table balanced will as shown in Fig.4.
3. Remove 4 screws marked by arrows with a box type screw driver as shown in Fig.4.

- Since the cabinet will drop when screws have been removed, be sure to support the cabinet with hands.

4. After 4 screws have been removed, put the cabinet slowly on cloth (At this time, be carefully so as not to damage the front surface of the cabinet) shown in Fig.5.

- The CRT should be assembled according to the opposite sequence of its dismounting steps.

* The CRT change table should preferably be smaller that the CRT surface, and its height be about 35cm.

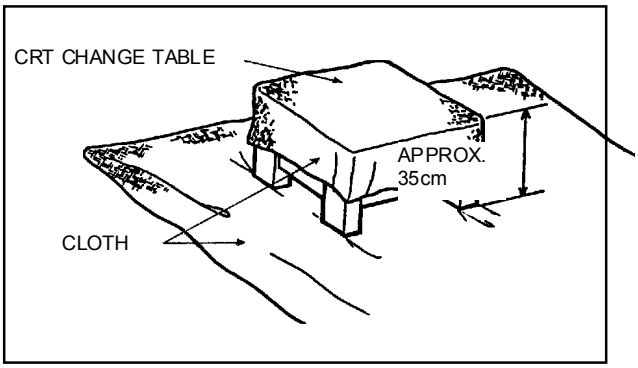

Fig. 3

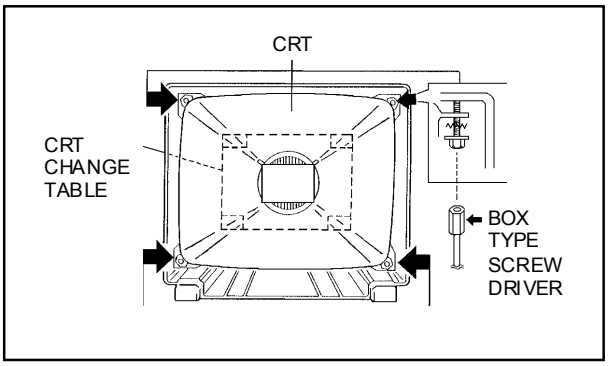

Fig. 4

COATING OF SILICON GREASE FOR ELECTRICAL INSULATION ON THE CRT ANODE CAP SECTION.

- Subsequent to replacement of the CRT and HV transformer or repair of the anode cap, etc. by dismounting them, be sure to coat silicon grease for electrical insulation as shown in Fig.6.

  Wipe around the anode button with clean and dry cloth. (Fig.6) Coat silicon grease on the section around the anode button. At this time, take care so that any silicon greases dose not stick to the anode button. (Fig.7)

★ **Silicon grease product No. KS - 650N**

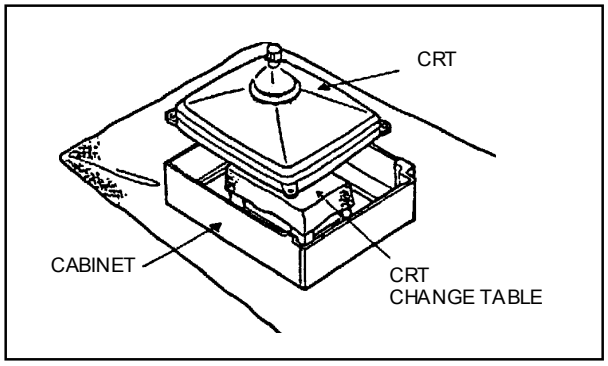

Fig. 5

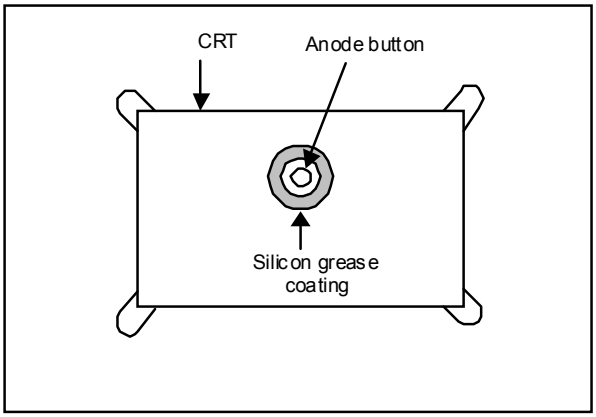

Fig. 6

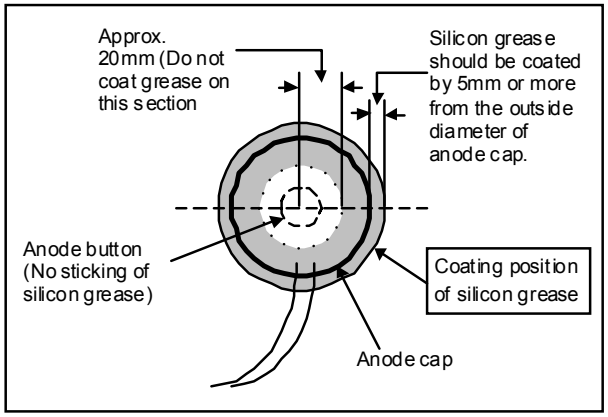

Fig. 7

REPLACEMENT OF CHIP COMPONENT

■ CAUTIONS

1. Avoid heating for more than 3 seconds.
2. Do not rub the electrodes and the resist parts of the pattern.
3. When removing a chip part, melt the solder adequately.
4. Do not reuse a chip part after removing it.

■ SOLDERING IRON

1. Use a high insulation soldering iron with a thin pointed end of it.
2. A 30w soldering iron is recommended for easily removing parts.

■ REPLACEMENT STEPS

1. How to remove Chip parts

◆ **Resistors, capacitors, etc**

(1) As shown in the figure, push the part with tweezers and alternately melt the solder at each end.

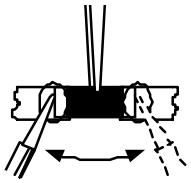

(2) Shift with tweezers and remove the chip part.

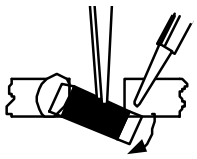

◆ **Transistors, diodes, variable resistors, etc**

(1) Apply extra solder to each lead.

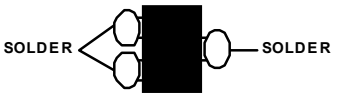

(2) As shown in the figure, push the part with tweezers and alternately melt the solder at each lead. Shift and remove the chip part.

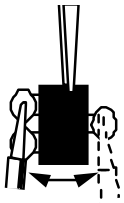

Note : After removing the part, remove remaining solder from the pattern.

2. How to install Chip parts

◆ **Resistors, capacitors, etc**

(1) Apply solder to the pattern as indicated in the figure.

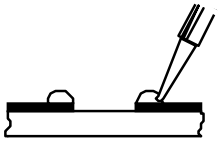

(2) Grasp the chip part with tweezers and place it on the solder. Then heat and melt the solder at both ends of the chip part.

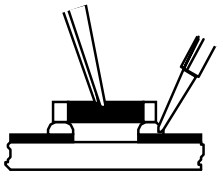

◆ **Transistors, diodes, variable resistors, etc**

(1) Apply solder to the pattern as indicated in the figure.
(2) Grasp the chip part with tweezers and place it on the solder.
(3) First solder lead **A** as indicated in the figure.

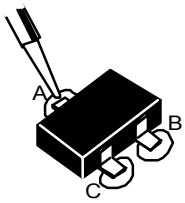

(4) Then solder leads **B** and **C**.

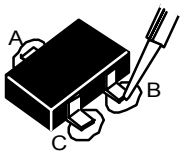

REPLACEMENT OF MEMORY ICs

1. Memory ICs

This TV use memory ICs. In the memory ICs, there are memorized data for correctly operating the video and deflection circuits. When replacing memory ICs, be sure to use ICs written with the initial values of data.

2. Procedure for replacing memory ICs

PROCEDURE
(1) **Power off** Switch the power off and unplug the power cord from the outlet.
(2) **Replace ICs**. Be sure to use memory ICs written with the initial data values.
(3) **Power on** Plug the power cord into the outlet and switch the power on.
(4) **Check and set SYSTEM CONSTANT SET:** * It must not adjust without signal. 1) Press the INFORMATION key and the MUTING key of the REMOTE CONTROL UNIT simultaneously. 2) The SERVICE MENU screen of Fig. 1 will be displayed. 3) While the SERVICE MENU is displayed, press the INFORMATION key and MUTING key simultaneously, and the SYSTEM CONSTANT SET screen of Fig. 2 will be displayed. 4) Check the setting values of the SYSTEM CONSTANT SET of Table 1. If the value is different, select the setting item with the FUNCTION UP/DOWN key, and set the correct value with the FUNCTION -/+ key. 5) Press the MENU key to memorize the setting value. 6) Press the INFORMATION key twice, and return to the normal screen.
(5) **Setting of receive channels** Set the receive channel. For setting, refer to the OPERATING INSTRUCTIONS.
(6) **User settings** Check the user setting values of Table 2, and if setting value is different, set the correct value. For setting, refer to the OPERATING INSTRUCTIONS.
(7) **Setting of SERVICE MENU** Verify the setting items of the **SERVICE MENU** of Table 3, and reset where necessary. For setting, refer to the SERVICE ADJUSTMENTS.

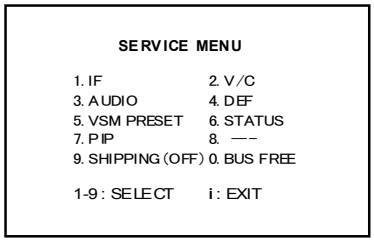

Fig.1

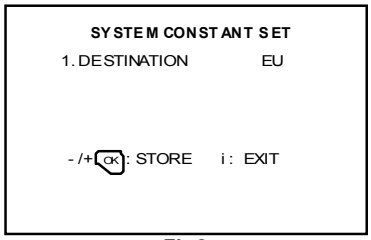

Fig.2

NAME OF REMOTE CONTROL KEY

Names of key	key
INFORMATION	
MUTING	
MENU	OK
FUNCTION UP/DOWN	
FUNCTION -/+	

SETTING VALUES OF SYSTEM CONSTANT SET (TABLE 1)

Setting item	Setting content	Setting value	Setting item	Setting content	Setting value
DESTINATION	EU → EK → EI	EU	DOLBY	NO → YES	NO
CRT TYPE	16:9 → 4:3	16:9	BBE	NO → YES	NO
PURITY	NO → YES	NO	PROGRESSIVE	NO → YES	NO
PICTURE TILT	NO → YES	NO	TDA9178	NO → YES	NO
DIGIPURE PRO	NO → YES	NO	TONE IC	NO → YES	NO
PIP	NO → 1TUNER → 2TUNER	NO	FLAT	NO → YES	NO
PIC&TEXT	NO → YES	NO			

USER SETTING VALUES (TABLE 2)

PICTURE SETTING		EXT SETTING	
TINT	COOL	ID	BLANK
CONTRAST / BRIGHT SHARP / COLOUR	REFER to VSM PRESET	S-IN DUBBING	BLANK EXT-1→EXT-2
PICTURE FEATURES		**FEATURES**	
DIGITAL VNR	AUTO	SLEEP TIMER	OFF
Digipure PRO	AUTO	BLUE BACK	ON
COLOUR SYSTEM	TV : According to preset CH EXT : AUTO		
4:3 AUTO ASPECT	PANORAMIC		
SOUND SETTING		**INSTALL**	
BASS / TREBLE / BALANCE	CENTER	LANGUAGE	ENGLISH
HYPERSOUND	OFF	EDIT/MANUAL	PRESET CH only The others : BLANK

SERVICE MENU SETING ITEMS (TABLE 3)

Setting item	Setting value	Setting item	Setting value
1. IF	1. VCO 2. ATT ON/OFF	4. DEF.	1. V-SHIFT 2. V-SIZE 3. H-CENT 4. H-SIZE 5. TRAPEZ 6. EW-PIN 7. COR-PIN 8. COR-UP 9. COR-LO 10. ANGLE 11. BOW 12. V-S.CR 13. V-LIN
2. V / C	1. RGB BLK 2. WDR R 3. WDR G 4. WDR B 5. BRIGHT 6. CONTRAST 7. COLOUR 8. HUE 9. SHARP 10. VCO ADJ.	5. VSM PRESET COOL NORMAL WARM	1. CONT. 2. BRIGHT 3. SHARP 4. COLOUR 5. HUE 6. WDR R 7. WDR G 8. WDR B
3.AUDIO **(Do not adjust)**	1. ERR LIMIT 2. A2 ID THR		
9.SHIPPING **(Do not adjust)**	ON/OFF	6.STATUS **(Do not adjust)**	VPS PDC

SERVICE ADJUSTMENTS

BEFORE STARTING SERVICE ADJUSTMENT

1. **There are 2 ways of adjusting this TV: One is with the REMOTE CONTROL UNIT and the other is the conventional method using adjustment parts and components.**
2. **The setting (adjustment) using the REMOTE CONTROL UNIT is made on the basis of the initial setting values. The setting values which adjust the screen to the optimum condition can be different from the initial setting values.**
3. Make sure that connection is correctly made to AC power source.
4. Turn on the power of the TV and measuring instrument for warming up for at least 30 minutes before starting adjustment.
5. If the receive or input signal is not specified, use the most appropriate signal for adjustment.
6. Never touch parts (such as variable resistors, transformers and condensers) not shown in the adjustment items of this service adjustment.
7. Preparation for adjustment (presetting):
   Unless otherwise specified in the adjustment items, preset the following functions with the REMOTE CONTROL UNIT.

- Setting position

PICTURE MODE (VSM)	NORMAL
SLEEP TIMER	OFF
TONE BALANCE	CENTER
ZOOM	PANORAMIC

MEASURING INSTRUMENT AND FIXTURES

1. DC voltmeter (or digital voltmeter)
2. Oscilloscope
3. Signal generator (Pattern generator) [PAL / SECAM / NTSC]
4. Remote control unit

ADJUSTMENT ITEMS

- Checking items.
- Adjustment of FOCUS & SCREEN
- VSM preset adjust setting.
- VIDEO / CHROMA circuit adjustment.
- DEFLECTION circuit adjustment.
- AUDIO circuit adjustment. (Do not adjust)

ADJUSTMENT LOCATIONS

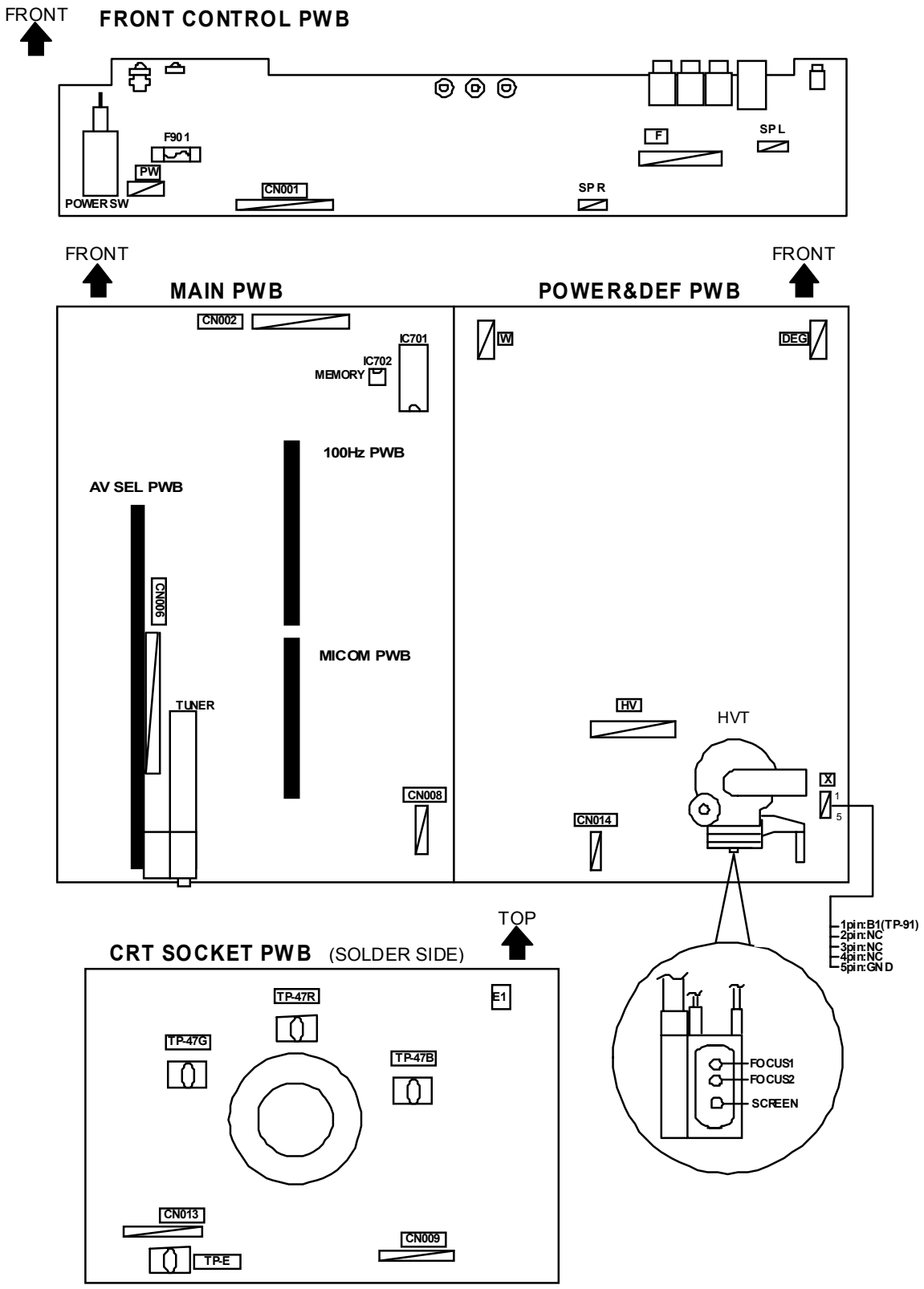

BASIC OPERATION SERVICE MENU

1. TOOL OF SERVICE MENU OPERATION

Operate the SERVICE MENU with the REMOTE CONTROL UNIT.

2. SERVICE MENU ITEMS

With the SERVICE MENU, various settings (adjustments) can be made, and they are broadly classified in the following items of settings (adjustments):

(1) **1. IF** ····· This mode adjusts the setting values of the IF circuit.

(2) **2.V/C** ····· This mode adjusts the setting values of the VIDEO / CHROMA circuit.

(3) **3.AUDIO** ····· This mode adjusts the setting values of the multiplicity SOUND circuit.

(4) **4.DEF** ····· This mode adjusts the setting values of the DEFLECTION circuit for each aspect mode given below.

FULL	(100/120Hzi)
PANORAMIC	(100/120Hzi)
SUBTITLE	(100/120Hzi)
COMPRESS(Fixed value)	(100/120Hzi)

(5) **5.VSM PRESET** ····· This mode adjusts the initial setting values of COOL, NORMAL and WARM.
(VSM : Video Status Memory)

3. BASIC OPERATION OF SERVICE MENU

(1) **How to enter SERVICE MENU**

Press the INFORMATION key and the MUTING key of the REMOTE CONTROL UNIT simultaneously, and the SERVICE MENU screen of Fig. 1 will be displayed.

SERVICE MENU

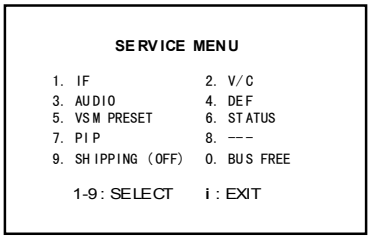

Fig.1

(2) **Selection of SUB MENU SCREEN**

Press one of keys 1～5 of the REMOTE CONTROL UNIT and select the SUB MENU SCREEN (See Fig. 3), form the SERVICE MENU.

SERVICE MENU → SUB MENU

1. IF
2. V / C
3. AUDIO
4. DEF.
5. VSM PRESET
6. STATUS
7. PIP
8. --
9. SHIPPING(OFF)
0. BUS FREE

Do not Work

NEME OF REMOTE CONTOROL KEY

Names of key	key
INFORMATION	
MUTING	
MENU	OK
FUNCTION UP/DOWN	
FUNCTION -/+	

Fig.2

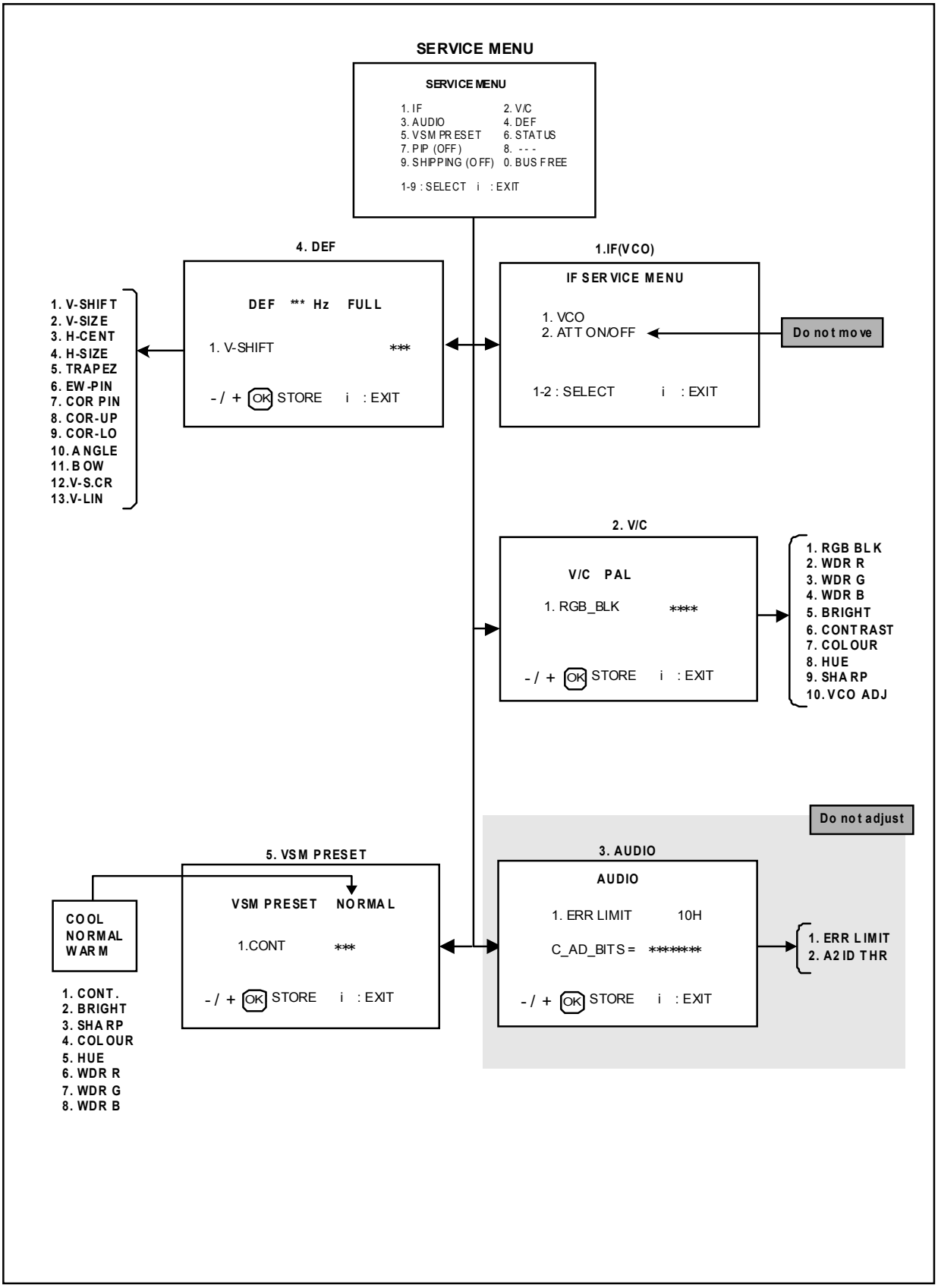

Fig.3 SUB MENU SCREEN

(3) Method of Setting

1) Method of Setting **1.IF**

[VCO] ····· It must not adjust without signal.

① 1 Key····· Select 1.IF.

② 1 Key····· Select 1.VCO(CW)

Make sure that the arrow position between the ABOVE REF and BELOW REF.

③ INFORMATION Key ····· Return to the SERVICE MENU screen.

2) Method of setting **2.V/C, 3.AUDIO, 4.DEF** and **5.VSM PRESET.**

① 2～5 Key····· Select one from **2.V/C, 3.AUDIO, 4.DEF** and **5.VSM PRESET**.

② FUNCTION UP / DOWN Key ···· Select setting items.

③ FUNCTION -/+····· Set (adjust) the setting values of the setting items.

④ MENU Key ····· Memorize the setting value.

(Before storing the setting values in memory, do not press the CH, TV, POWER ON / OFF key - if you do, the values will not be stored in memory.)

⑤ INFOMATION Key ····· Return to the **SERVICE MENU** screen.

3) Can not setting **6.STATUS, 7.PIP, 8.--- , 9.SHIPPING(OFF) & 0.BUS FREE**.

(4) **Release of SERVICE MENU**

1) After completing the setting, return to the SERVICE MENU, then again press the INFORMATION key.

ADJUSTMENTS

CHECK ITEM

Item	Measuring instrument	Test point	Adjustment part	Description
Check of B1 Power Supply	**Signal generator** **DC voltmeter** **Remote control unit**	**TP-91(B1)** **TP-E(⏚)** **[X connector on POWER DEF PWB]**	**1.RGB BLK**	1. Receive a any broadcast. 2. Push the "ZOOM" key and select the FULL mode. 3. Select 2. V/C from the SERVICE MENU. 4. Select 1. RGB BLK with function UP / DOWN key. 5. Press the function +(⊿) key to find the cut off screen (Black screen). 6. Connect a DC voltmeter to TP-91(B1) and TP-E(⏚). 7. Make sure that the voltage is DC139.9 ±2.0V. 8. Press the function – (⊿) key to return to service menu..
Check of High Voltage	**Signal generator** **DC volunteer** **Remote control unit**	**CRT anode** **Chassis GND**	**1.RGB BLK**	1. Receive a any broadcast. 2. Push the "ZOOM" key and select the FULL mode. 3. Select 2. V/C from the SERVICE MENU. 4. Select 1. RGB BLK with function UP / DOWN key. 5. Press the function +(⊿) key to find the cut off screen (Black screen). 6. Connect a DC voltmeter to CRT ANODE and chassis GND. 7. Make sure that the voltage is DC 31.0kV +1kV -1.5kV . 8. Press the function – (⊿) key to return to service menu.
Check of VCO	**Remote control unit**		**1. VCO**	● Under normal conditions, no adjustment is required. ● Confirmation adjustment. 1. Select 1.IF from the SERVICE MENU. 2. Then select 1.VCO from the IF SERVICE MENU. 3. Receive any broadcast. 4. Check the arrow (□) position between the ABOVE REF. and BELOW REF.

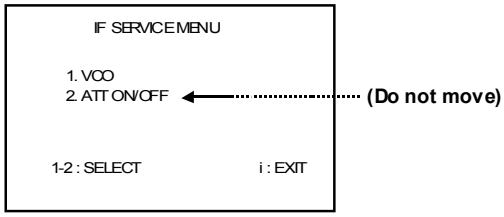

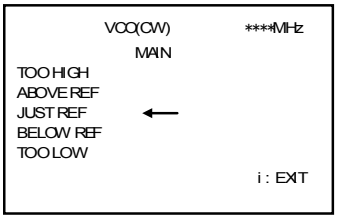

ADJUSTMENT OF FOCUS & SCREEN

Item	Measuring instrument	Test point	Adjustment part	Description
DAdjustment of FOCUS	Signal generator		FOCUS VR [In HVT]	1. Receive a cross-hatch signal. Select FULL mode. 2. While watching the screen, adjust the FOCUS VR to make the vertical and horizontal lines as fine and sharp as possible. 3. Make sure that when the screen is darkened, the lines remain in good focus.
Adjustment of SCREEN	Signal generator		SCREEN VR [In HVT]	1 Press a whole black signal 2 Press the ZOOM key and select the FULL mode. 3 Select 2. V/C from the SERVICE MENU. 4 Turn the SCREEN VR clockwise from the full counter clockwise position and stop it at the point where "CLOW" status (marked ⬆ in Fig.) changes from 1 to 0 to 1 (which is indicated at the 3rd column from the right.) 5 Then turn the SCREEN VR counterclockwise, and stop where the "CLOW" status changes 1 to 0 ∗ "CLOW" : control loopout of window.

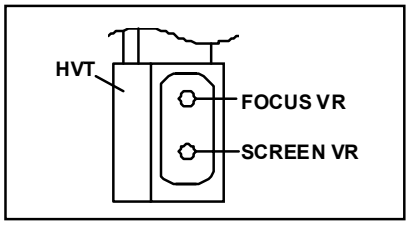

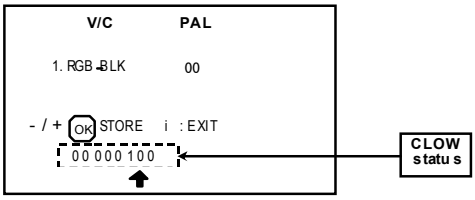

SERVICE MODE SCREEN

VSM PRESET ADJUST SETTING

Item	Measuring instrument	Test point	Adjustment part	Description
Setting of VSM PRESET	Remote control unit		1. CONT. 2. BRIGHT 3. SHARP 4. COLOUR 5. HUE 6. WDR R 7. WDR G 8. WDR B	1. Select 5.VSM PRESET from the SERVICE MENU. 2. Select COOL with the MENU key of the remote control unit. 3. Adjust the FUNCTION UP/DOWN and -/+ key to bring the set values of 1.CONT ~ 8. WDR B to the values shown in the table. 4. Press the MENU key and memorize the set value. 5. Respectively select the VSM PRESET mode for NORMAL and WARM, and make similar adjustment as in 3 above. 6. Press the MENU key and memorize the set value. ∗ Refer to OPERATING INSTRUCTIONS for the PICTURE

Setting item / VSM preset mode	1.CONT.	2.BRIGHT	3.SHARP	4.COLOUR	5.HUE	6.WDR R	7.WDR G	8.WDR B
COOL	+13	0	-11	+1	0	-17	-9	0
NORMAL	0	0	-11	0	0	0	0	0
WARM	-13	0	-11	-1	0	+4	0	0

SETTING VALUES OF VSM PRESET

VIDEO / CHROMA CIRCUIT ADJUSTMENT

The setting (adjustment) using the REMOTE CONTROL UNIT is made on the basis of the initial setting values.
The setting values which adjust the screen to the optimum condition can be different from the initial setting values.

Setting item (Adjustment item)	Initial setting value		
2. V/C	**PAL**	**SECAM**	**NTSC**
1.RGB BLK	———	———	———
2.WDR R	0	←	←
3.WDR G	0	←	←
4.WDR B (Do not adjust)	-12	←	←
5.BRIGHT	0	←	←
6.CONTRAST	0	←	←
7.COLOUR	0	0	0
8.HUE	———	———	+20
9.SHARP (Do not adjust)	+7	←	←
11.VID AGC (Do not adjust)	0	———	———
12.SYC SLI	+7		
13.A MOVIE	+1		

Item	Measuring instrument	Test point	Adjustment part	Description
Adjustment of WHITE BALANCE (High Light)	**Signal generator** **Remote control unit**		**2. WDR R** **3. WDR G** **4. WDR B (Do not adjust)**	● Set the PICTURE MODE to NORMAL. 1. Receive a black and white signal (colour off). 2. Select 2.V/C from the SERVICE MENU. 3. Modify 2. WDR R and 3.WDR G data to adjust the white balance (high light). 4. Press the MENU key and memorize the set value. 5. Change the contrast and brightness with the remote control up & down from low–light to high–light and check that the tracking of the white balance is good.
Adjustment of SUB BRIGHT	**Remote control unit**		**5. BRIGHT**	1. Receive any broadcast. 2. Select 2.V/C from the SERVICE MENU. 3. Select 5.BRIGHT with the FUNCTION UP/DOWN key. 4. Set the initial setting value with the FUNCTION -/+ key. 5. If the brightness is not the best with the initial setting value, make fine adjustment until you get the best brightness. 6. Press the MENU key and memorize the set value.
Adjustment of SUB CONT.	**Remote control unit**		**6.CONT.**	1. Receive any broadcast. 2. Select 2.V/C from the SERVICE MENU. 3. Select 6.CONT with the FUNCTION UP/DOWN key. 4. Set the initial setting value with the FUNCTION - / + key. 5. If the contrast is not the best with the initial setting value, make fine adjustment until you get the best contrast. 6. Press the MENU key and memorize the set value.

Item	Measuring instrument	Test point	Adjustment part	Description
Adjustment of SUB COLOUR I	**Remote control unit**		**7.COLOUR (PAL～NTSC)**	**[Method of adjustment without measuring instrument]**
			PAL COLOUR	(PAL COLOUR) 1. Receive PAL broadcast. 2. Select 2.V/C from the SERVICE MENU. 3. Select 7.COLOUR with the FUNCTION UP/DOWN key. 4. Set the initial setting value for PAL COLOUR with the FUNCTION - or + key. 5. If the colour is not the best with the initial set value, make fine adjustment until you get the best colour. 6. Press the MENU key and memorize the set value.
			SECAM COLOUR	(SECAM COLOUR) 1. Receive a SECAM broadcast. 2. Make fine adjustment of SECAM COLOUR in the same manner as for above.
			NTSC COLOUR	(NTSC 3.58 COLOUR) 1. Input a NTSC 3.58MHz COMPOSITE VIDEO signal from the EXT terminal. 2. Make similar fine adjustment of NTSC 3.58 COLOUR in the same manner as for above. (NTSC 4.43COLOUR) 1. When NTSC 3.58 COLOUR set, NTSC 4.43 COLOUR will automatically set.

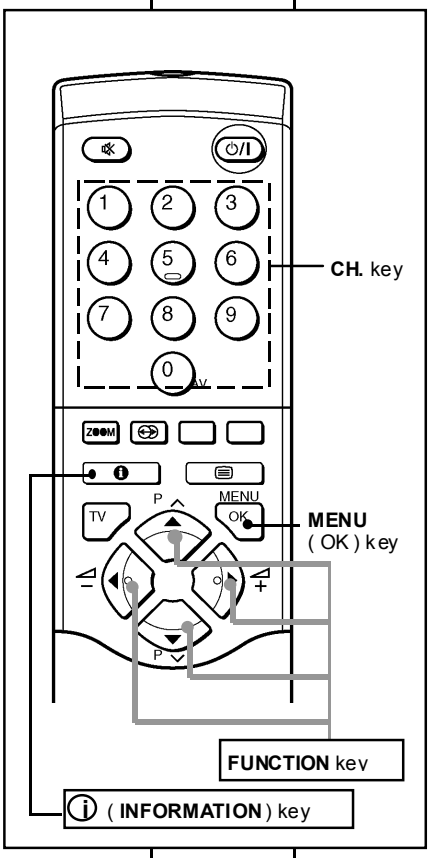

REMOTE CONTROL KEY

Item	Measuring instrument	Test point	Adjustment part	Description
Adjustment of SUB COLOUR Ⅱ	**Signal generator** **Oscilloscope** **Remote control unit**	**TP-47B** **TP-E(⏚)** **[CRT SOCKET PWB]**	**7.COLOUR (PAL～NTSC)**	**[Method of adjustment using measuring instrument]**
			PAL COLOUR	(PAL COLOUR) 1. Receive a PAL full field colour bar signal (75% white). 2. Select 2.V/C from the SERVICE MENU. 3. Select 7.COLOUR with the FUNCTION UP/DOWN key. 4. Set the initial setting value of PAL COLOUR with the FUNCTION - or + key. 5. Connect the oscilloscope between TP-47B and TP-E(⏚). 6. Adjust PAL COLOUR and bring the value of (**A**) in the illustration to the values as shown given billow (Voltage difference between white (W) and blue (B)). 7. Press the MENU key and memorize the setting value. **VOLTAGE (W-B)** | **+8V**
			SECAM COLOUR	(SECAM COLOUR) 1. Receive a SECAM full field colour bar signal(75% white). 2. Set the initial setting value of SECAM COLOUR with the FUNCTION -/+ key. 3. Adjust SECAM COLOUR and bring the value of (**A**) in the illustration to the values as shown given billow (Voltage difference between white (W) and blue (B)). 4. Press the MENU key and memorize the setting value. **VOLTAGE (W-B)** | **+7V**
			NTSC COLOUR	(NTSC 3.58 COLOUR) 1. Input a NTSC 3.58MHz COMPOSITE VIDEO signal (full field colour bar with 75% white) from the EXT terminal. 2. Set the initial setting value of NTSC 3.58 COLOUR with the FUNCTION -/+ key. 3. Adjust NTSC 3.58 COLOUR and bring the value of (**A**) in the illustration to the values as shown given billow (Voltage difference between white (W) and blue (B)).. 4. Press the MENU key and memorize the setting value. **VOLTAGE (W-B)** | **0V** (NTSC 4.43COLOUR) 1. When NTSC 3.58 COLOUR set, NTSC 4.43 COLOUR will automatically set.

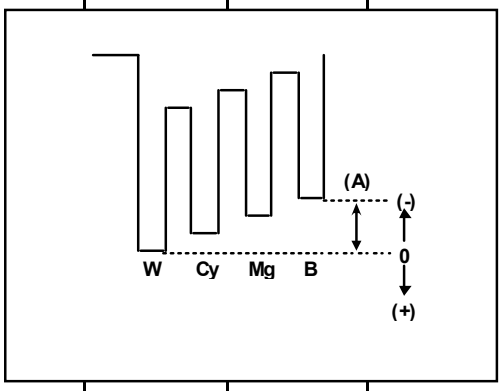

Item	Measuring instrument	Test point	Adjustment part	Description
Adjustment of SUB HUE Ⅰ	**Remote control unit**		**8. HUE**	**[Method of adjustment without measuring instrument]**
			NTSC 3.58 HUE	[NTSC 3.58 HUE] 1. Input a NTSC 3.58MHz COMPOSITE VIDEO signal (full field colour bar with 75% white) from the EXT terminal. 2. Select 2.V/C from the SERVICE MENU. 3. Select 8. HUE with the FUNCTION UP/DOWN key. 4. Set the initial setting value of NTSC 3.58 HUE with the FUNCTION -/+ key. 5. If you cannot get the best hue with the initial setting value, make fine adjustment until you get the best hue. 6. Press the MENU key and memorize the set value.
			NTSC 4.43 HUE	(NTSC 4.43 HUE) 1. When NTSC 3.58 is set, NTSC 4.43 will be automatically set at the respective values
Adjustment of SUB HUE Ⅱ	**Signal generator** **Oscilloscope** **Remote control unit**	**TP-47B** **TP-E(⏚)** **[CRT SOCKET PWB]**	**8. HUE**	**[Method of adjustment using measuring instrument]**
			NTSC 3.58 HUE	[NTSC 3.58 HUE] 1. Input a NTSC 3.58MHz COMPOSITE VIDEO signal (full field colour bar with 75% white) from the EXT terminal. 2. Select 2.V/C from the SERVICE MENU. 3. Select 8. HUE with the FUNCTION UP/DOWN key. 4. Set the initial setting value of NTSC 3.58 HUE with the FUNCTION - or + key. 5. Connect the oscilloscope between TP-47B and TP-E(⏚) 6. Adjust NTSC 3.58 HUE to bring the value of **(B)** in the illustration to **-1V** (voltage difference between white (W) and magenta (Mg)). 7. Press the MENU key and memorize the setting value
			NTSC 4.43 HUE	(NTSC 4.43 HUE) 1. When NTSC 3.58 COLOUR set, NTSC 4.43 COLOUR will automatically set.

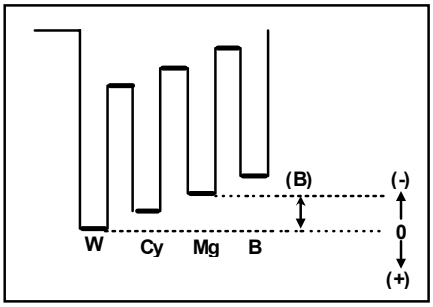

DEFLECTION CIRCUIT ADJUSTMENT

There are 4 aspect modes (①FULL, ②PANORAMIC, ③SUBTITLE, ④COMPRES) of the adjustment (1) 100Hz i mode, (2) 120Hz i mode ····· depending upon the kind of signals (vertical frequency 100Hzi / 120Hzi).

- **When the 100Hz FULL mode has been established, the setting of other modes will be done automatically. However, if the picture quality has not been optimized, adjust each mode again, respectively.**
- **The adjustment using the remote control unit is made on the basis of the initial setting values.**
- **The setting values which adjust the screen to the optimum condition can be different from the initial setting values.**

Initial setting value (1/2) * : Fixed value

Setting item	Adjustment name	Initial setting value			
		FULL		PANORAMIC	
		100Hzi	120Hzi	100Hzi	120Hzi
1. V-SHIFT	Vertical center	-006	-006	0000	0000
2. V-SIZE	Vertical height	-006	-001	+003	0000
3. H-CENT	Horizontal center	-014	+002	-003	0000
4. H-SIZE	Horizontal width	+007	-003	-004	0000
5. TRAPEZ	Trapezoidal distortion correction	-016	-010	0000	0000
6. EW-PIN	Side pin correction	-045	0000	0000	0000
7. COR-PIN	Corner Pin	-005	0000	+002	0000
8. COR-UP	Corner Pin correction Up side	-003	-004	+005	0000
9. COR-LO	Corner Pin correction Low side	-007	-003	-002	0000
10.ANGLE	Angle correction	0000	0000	0000	0000
11.BOW	Bow-shaped distortion correction	0000	0000	0000	0000
12.V-S.CR **(Do not adjust)**	Vertical height correction	-007	0000	+013	0000
13.V-LIN **(Do not adjust)**	Vertical Linearity	-003	-002	0000	0000

Initial setting value (2/2) * : Fixed value

Setting item	Adjustment name	Initial setting value			
		SUBTITLE		COMPRESS	
		100Hzi	120Hzi	100Hzi	60P
1. V-SHIFT	Vertical center	+012	-002	0000	0000
2. V-SIZE	Vertical height	+009	0000	-011	0000
3. H-CENT	Horizontal center	0000	0000	0000	0000
4. H-SIZE	Horizontal width	0000	0000	0000	0000
5. TRAPEZ	Trapezoidal distortion correction	-001	0000	0000	0000
6. EW-PIN	Side pin correction	-001	0000	0000	0000
7. COR-PIN	Corner Pin	-005	0000	0000	0000
8. COR-UP	Corner Pin correction Up side	+009	0000	0000	0000
9. COR-LO	Corner Pin correction Low side	+005	0000	0000	0000
10. ANGLE	Angle correction	0000	0000	0000	0000
11. BOW	Bow-shaped distortion correction	0000	0000	0000	0000
12. V-S.CR **(Do not adjust)**	Vertical height correction	+003	0000	0000	0000
13. V-LIN **(Do not adjust)**	Vertical Linearity	-027	0000	0000	0000

Item	Measuring instrument	Test point	Adjustment part	Description
Adjustment of V-SHIFT	**Signal generator** **Remote control unit**		**1.V- SHIFT**	[FULL mode] 1. Receive a circle pattern signal of vertical frequency 50Hz. 2. Select 4.DEF from the SERVICE MENU. 3. Select 1.V-SHIFT with the FUNCTION UP/DOWN key. 4. Adjust V-SHIFT to make **A = B**. 5. Check the adjustment value above in other zoom mode. If it is a wrong adjustment, re-adjust in PANORAMIC mode and adjust by 1.V-SHIFT. 6. Press the MENU key and memorize the set value.
Adjustment of V-SIZE			**2.V-SIZE**	7. Receive a cross-hatch signal. 8. Select 2.V-SIZE and set the initial setting value. 9. Adjust V-SIZE and make sure that the vertical screen size of the picture size is in the bellow table. 10. Press the MENU key and memorize the set value. 11. Input a NTSC VIDEO signal (60Hz) from the EXT terminal, and make sure that the vertical screen size is in the table below. 12. Press the MENU key and memorize the set value

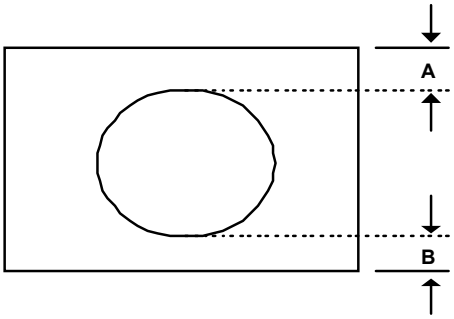

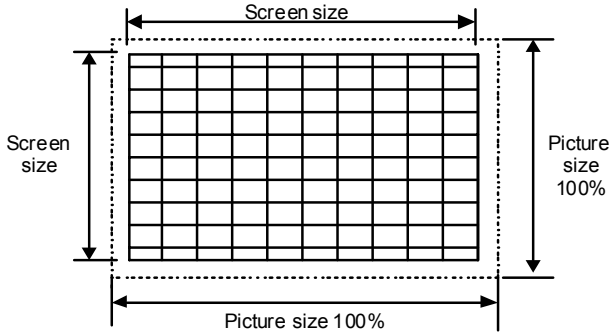

ASPECT MODE	FULL	PANORAMIC	SUBTITLE
SCREEN TOP	92%	87%	70%
SCREEN BOTTOM	92%	87%	83%

[SCREEN SIZE]

Item	Measuring instrument	Test point	Adjustment part	Description
Adjustment of H.CENTER			**3.H-CENT.**	13. Receive a circle pattern signal. 14. Select 3.H-CENT and set the initial setting value. 15. Adjust H-CENT to make **C=D**. 16. Press the MENU key and memorize the set value.
Adjustment of H.SIZE			**4.H-SIZE**	17. Receive a circle pattern signal. 18. Select 4.H-SIZE and set the initial setting value. 19. Adjust H-SIZE and make sure that the horizontal screen size of the picture size is in the bellow table. 20. Press the MENU key and memorize the set value. 21. Input a NTSC VIDEO signal (60Hz) from the EXT terminal, and make sure that the horizontal screen size of the each ASPECT mode is in the below table. 22. Press the MENU key and memorize the set value.
Adjustment of EW-PIN			**6.EW-PIN**	23. Select 6.EW-PIN and set the initial setting value 24. Adjust EW-PIN and make the 2nd.vertical lines at the left and right edges of the screen straight. Also make sure that the 3rd vertical lines are straight. 25. Press the MENU key and memorize the set value.

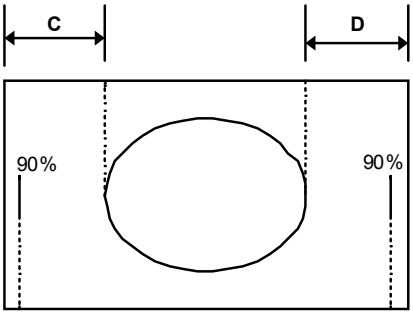

ASPECT MODE	FULL	PANORAMIC	SUBTITLE
H SIZE	92%	95%	92%

[SCREEN SIZE]

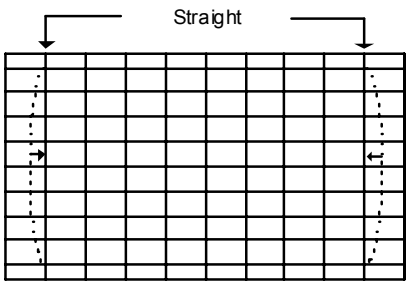

Item	Measuring instrument	Test point	Adjustment part	Description
Adjustment of TRAPEZ	**Signal generator** **Remote control unit**		**5.TRAPEZ**	26. Receive a cross-hatch signal. 27. Select 5.TRAPEZ with the FUNCTION UP/DOWN key. 28. Set the initial setting value of TRAPEZ with the FUNCTION - or + key. 29. Adjust TRAPEZ and bring the VERTICAL lines at the right and left edges of the screen parallel . 30. Press the MENU key and memorize the set value.
Adjustment of COR. UP/LO	**Signal generator** **Remote control unit**		**7.COR-PIN** **8.COR-UP** **9.COR-LO**	31. Select 8.COR-UP with the FUNCTION UP / DOWN key. 32. Set the initial setting value of COR.-UP with the FUNCTION - or + key. 33. Adjust COR-UP, and bring the straight line at the upper corner. 34. Select 9.COR-LO with the FUNCTION UP / DOWN key. 35. Set the initial setting value of COR-LO with the FUNCTION - or + key. 36. Adjust COR-LO, and bring the straight line at the low corner. 37. Press the MENU key and memorize the set value. 38. If the extream upper & lower corners are a little pin or barrel chose 7.COR-PIN and adjust. 39. Press the MENU key and memorize the set value
Adjustment of ANGLE			**10. ANGLE**	• In case where there is a parallelogrammical distortion of images on the screen.(FigA) 40. Select 10.ANGLE with the FUNCTION UP / DOWN key. 41. Adjust ANGEL, and bring the VERTICAL lines straight.. 42. Press the MENU key and memorize the set value.

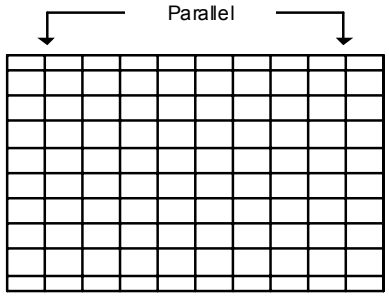

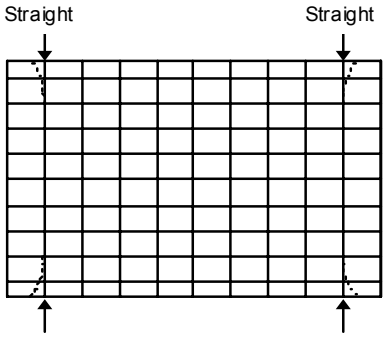

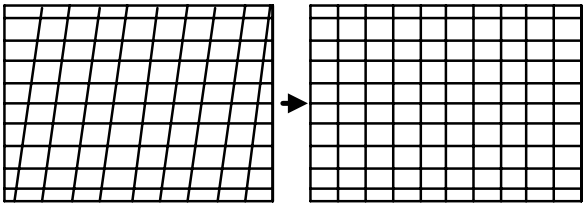

Fig. A

Item	Measuring instrument	Test point	Adjustment part	Description
Adjustment of BOW			**11.BOW**	• **In case where there is a bow-shaped distortion of images on the screen. (Fig.B)** 43. Select 11.BOW with the FUNCTION UP/DOWN key. 44. Adjust BOW, and bring the VERTICAL lines straight. 45. Press the MENU key and memorize the set value.
Adjustment of V-S.CR& V.LINEARITY			**12.V-S.CR** **13.V-LIN**	• **When the vertical linearity has been deteriorated remarkably, perform the following steps.** 46. Receive a cross-hatch signal. 47. Select 13.V-LIN with the FUNCTION UP/DOWN key. 48. Set the initial setting value of 13.V-LIN with the FUNCTION - / + key. 49. Select 12.V-S.COR with the FUNCTION UP / DOWN key. 50. Set the initial setting value of 12.V-S.COR with the FUNCTION - / + key. 51. Adjust 13.V-LIN and 12.V-S.COR so that the spaces of each line on TOP, CENTER and BOTTOM become uniform. ***NOTE :** Do not adjust PANORAMIC & SUBTITLE mode.*
				At first the adjustment in 100Hz FULL mode should be done, then the data for the other aspect mode is corrected in the respective value at the same time. And confirm the deflection adjustment initial setting value in 120Hz (NTSC EXT mode) FULL mode. If the adjustment in 100Hz each aspect mode has been done and stored, the data for the same aspect modes in 120Hz is corrected in the respective value. Only the data for the other aspect mode in 120Hz is corrected for itself.

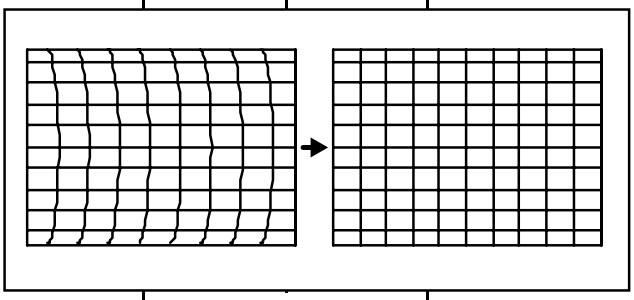

Fig. B

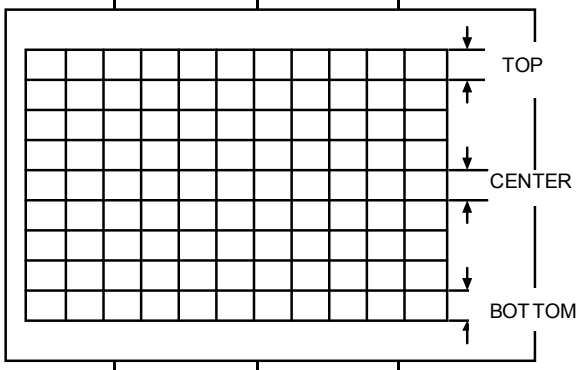

AUDIO CIRCUIT ADJUSTMENT

- Do not touch **3. AUDIO** adjustment of the SERVICE MENU as it requires no adjustment.
  If values had changed for the some reason, set the initial values in the following table.

3. AUDIO(Do not adjust)

Setting item	Variable range	fixed value
1. ERR LIMIT	00H～FFH	0AH
2. A2 ID THR	00H～FFH	19H

AV28CH1EUS
AV28CH1EUB

AV28CH1EUS
AV28CH1EUB

BLOCK DIAGRAM

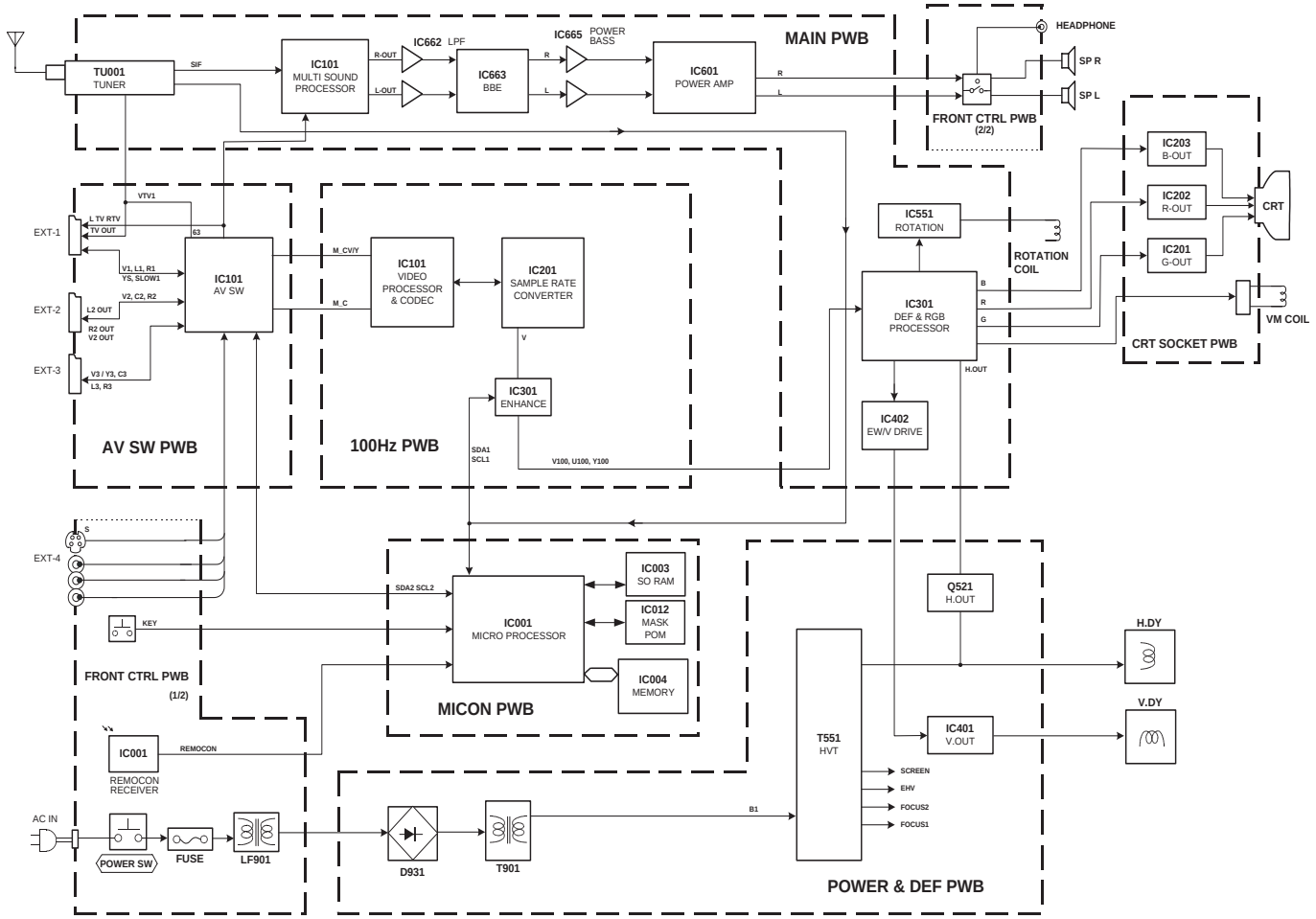

AV28CH1EUS
AV28CH1EUB

AV28CH1EUS
AV28CH1EUB

CIRCUIT DIAGRAMS *MAIN PWB CIRCUIT DIAGRAMS* [1/2]

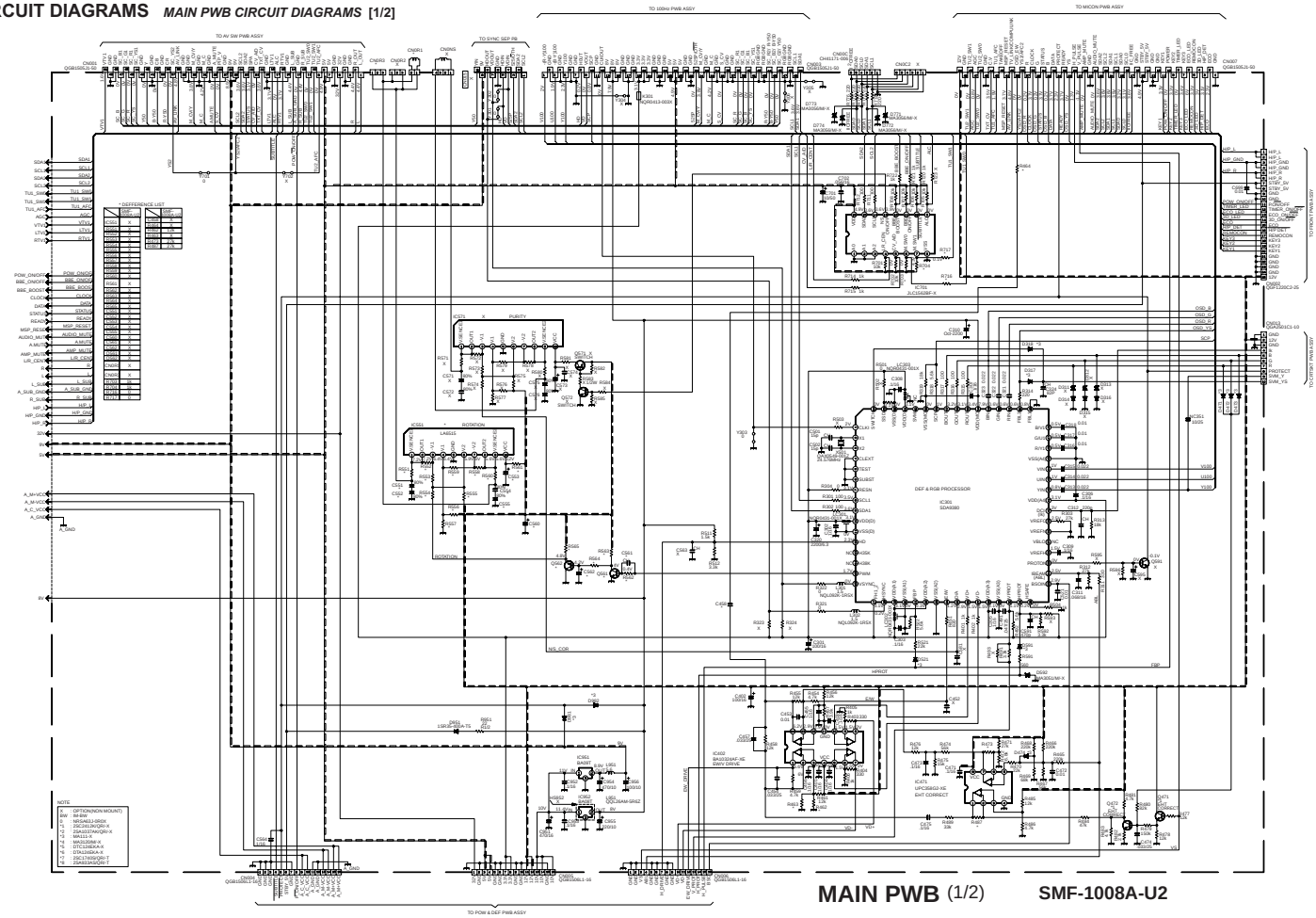

MAIN PWB (1/2) **SMF-1008A-U2**

AV28CH1EUS
AV28CH1EUB

AV28CH1EUS
AV28CH1EUB

MAIN PWB CIRCUIT DIAGRAM **[2/2]**

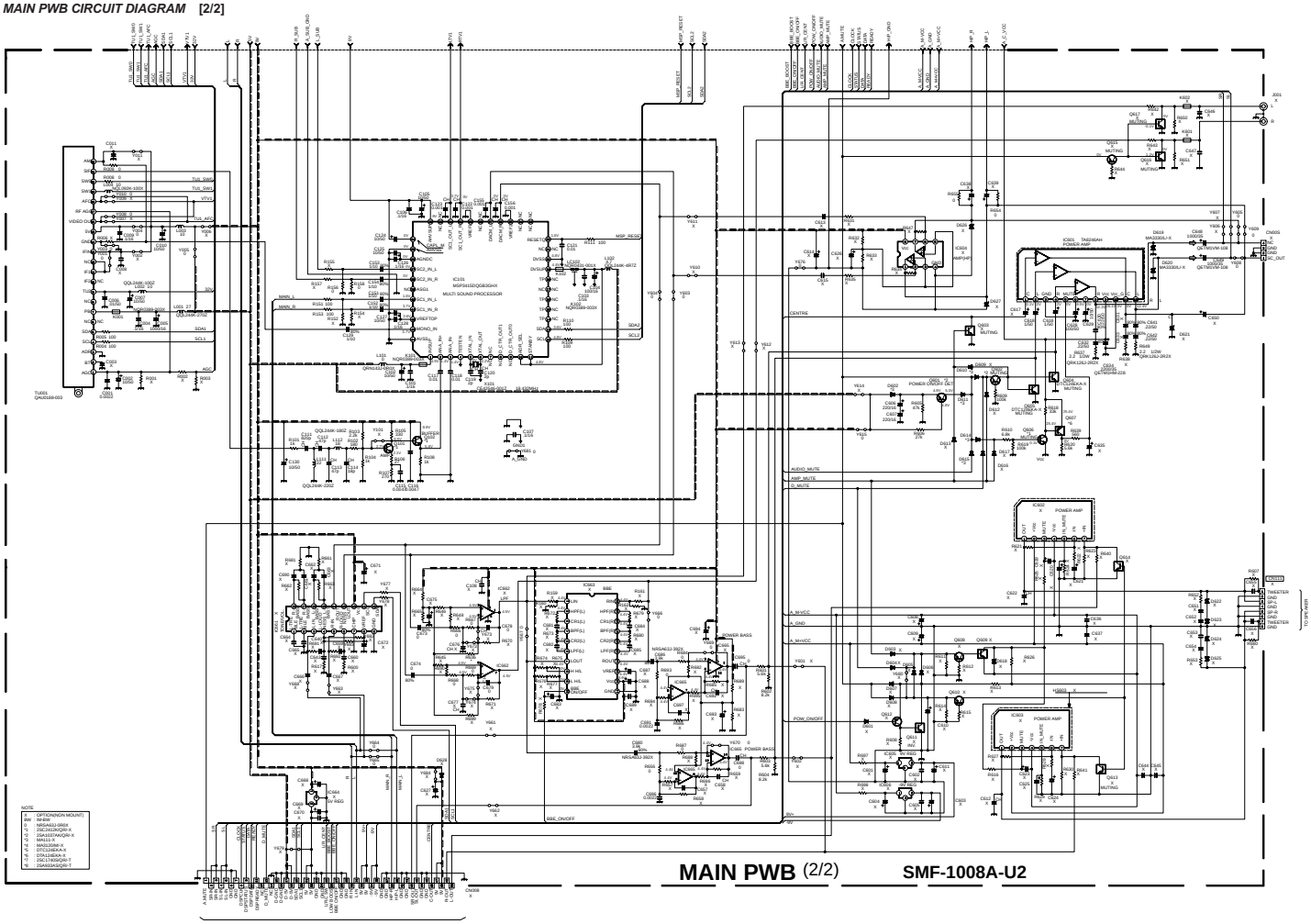

AV28CH1EUS AV28CH1EUS
AV28CH1EUB AV28CH1EUB

POWER & DEF. PWB CIRCUIT DIAGRAM

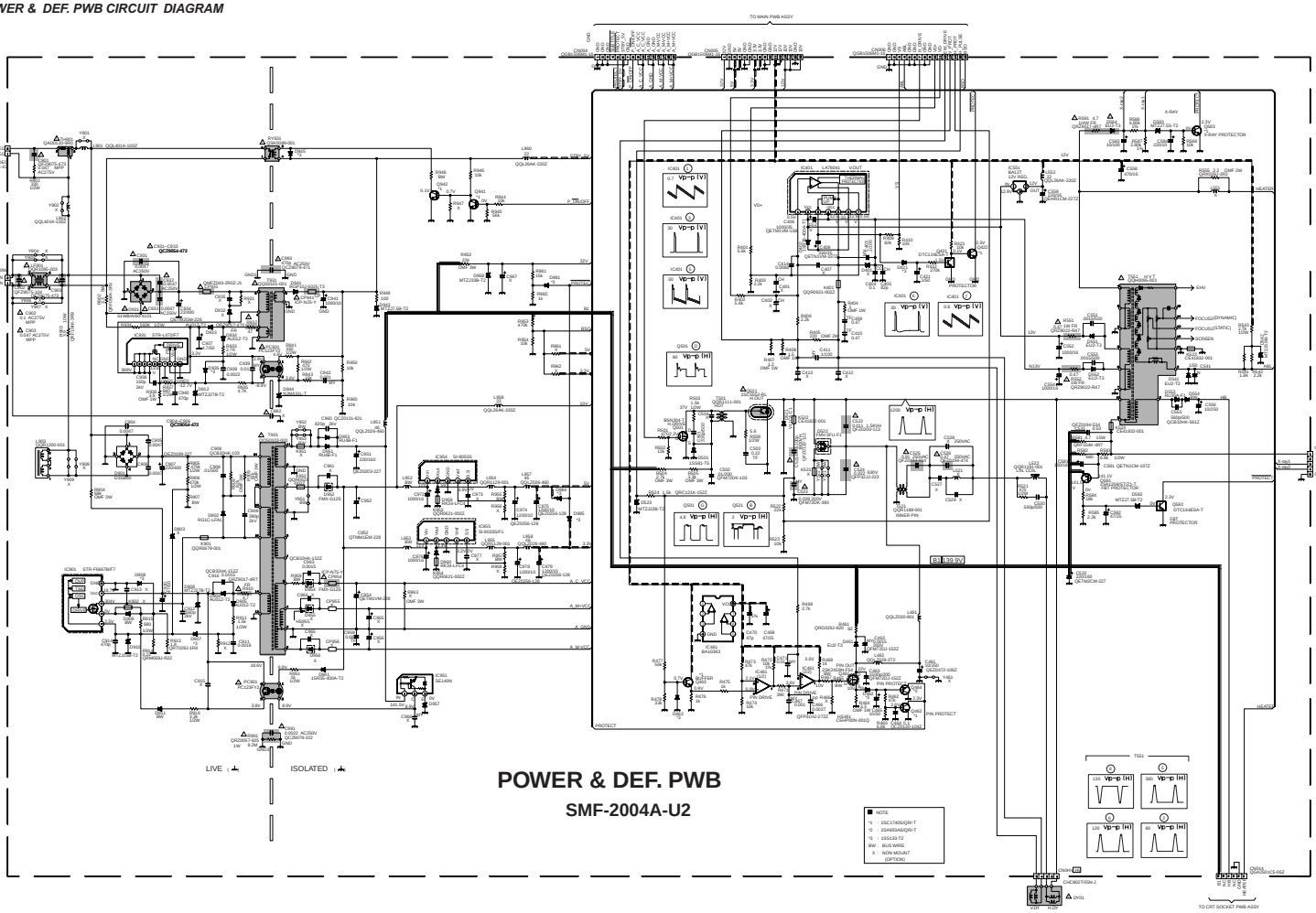

AV28CH1EUS
AV28CH1EUB

AV28CH1EUS
AV28CH1EUB

100Hz PWB CIRCUIT DIAGRAM

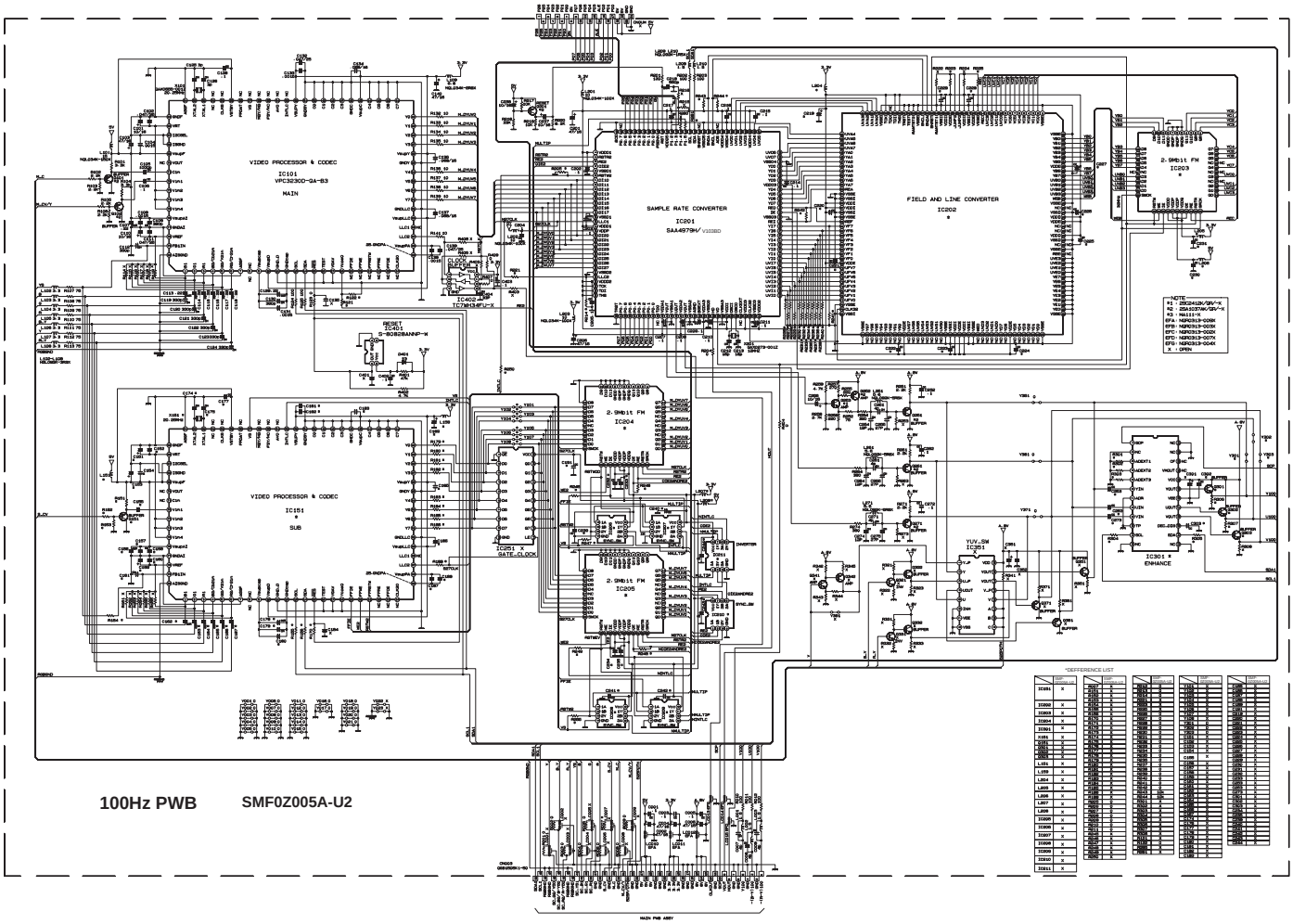

No.51944

2-11

2-12

No.51944

AV28CH1EUS
AV28CH1EUB

AV28CH1EUS
AV28CH1EUB

MICON PWB CIRCUIT DIAGRAM

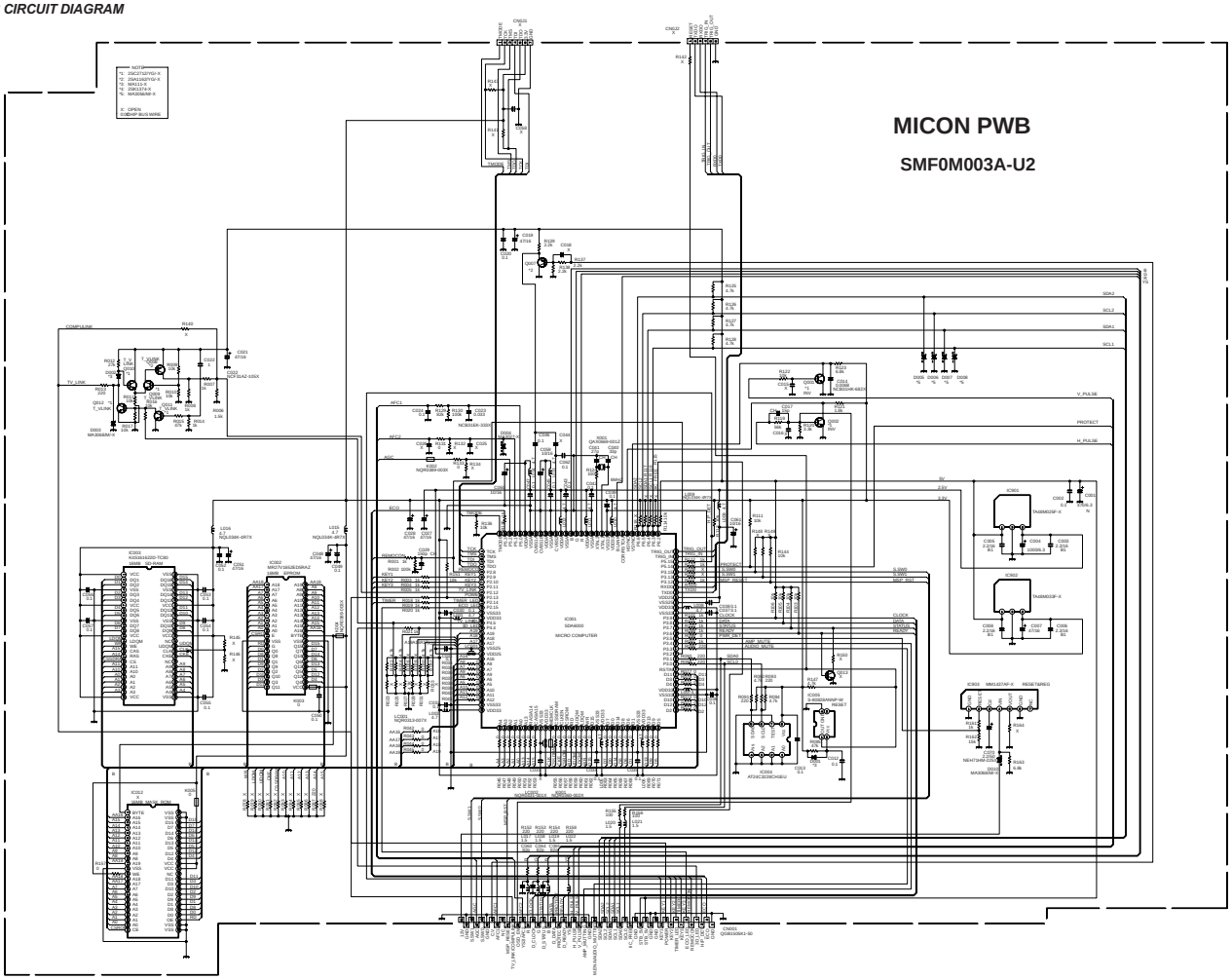

AV28CH1EUS
AV28CH1EUB

FRONT CTRL PWB CIRCUIT DIAGRAM

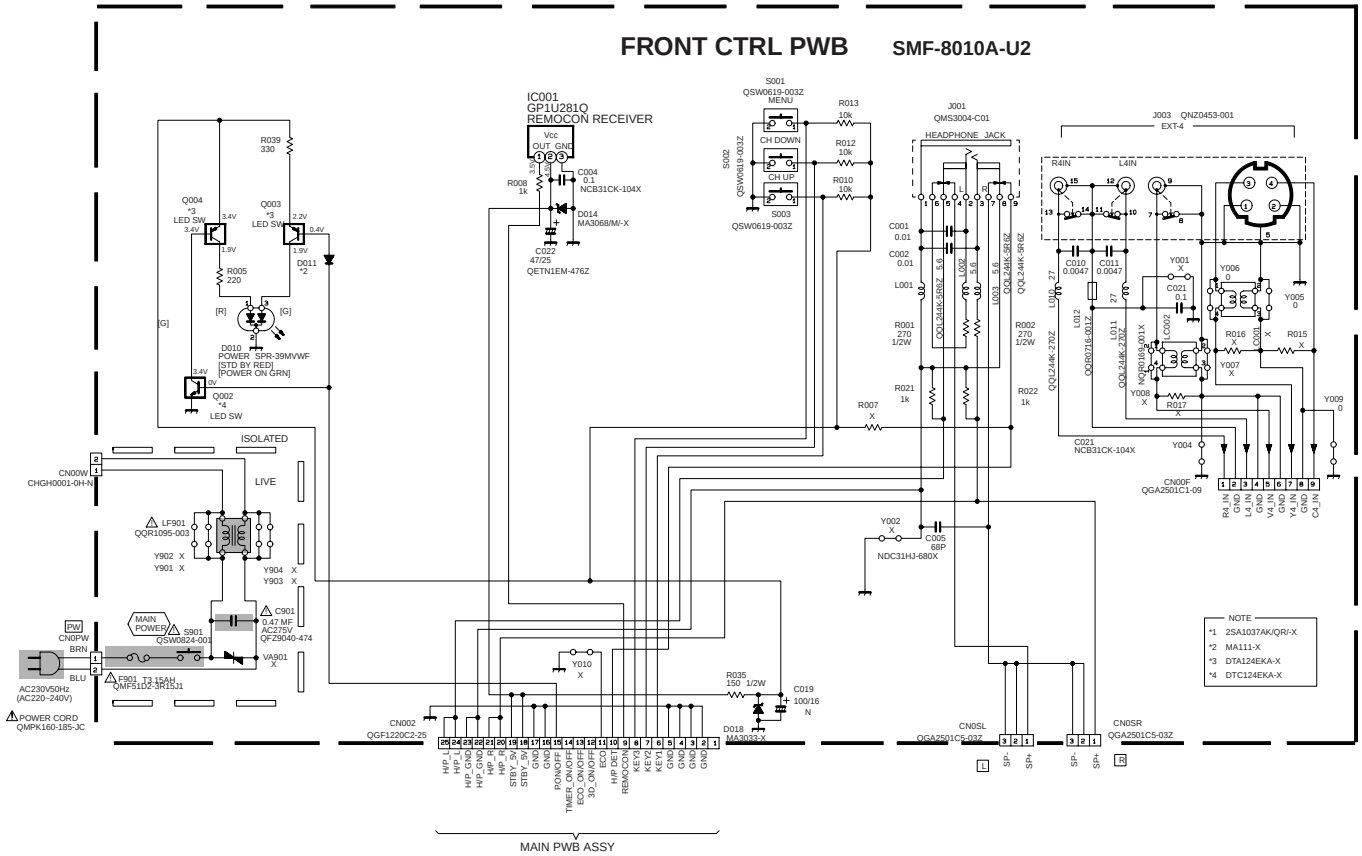

AV28CH1EUS
AV28CH1EUB

AV28CH1EUS
AV28CH1EUB

CRT SOCKET PWB CIRCUIT DIAGRAM

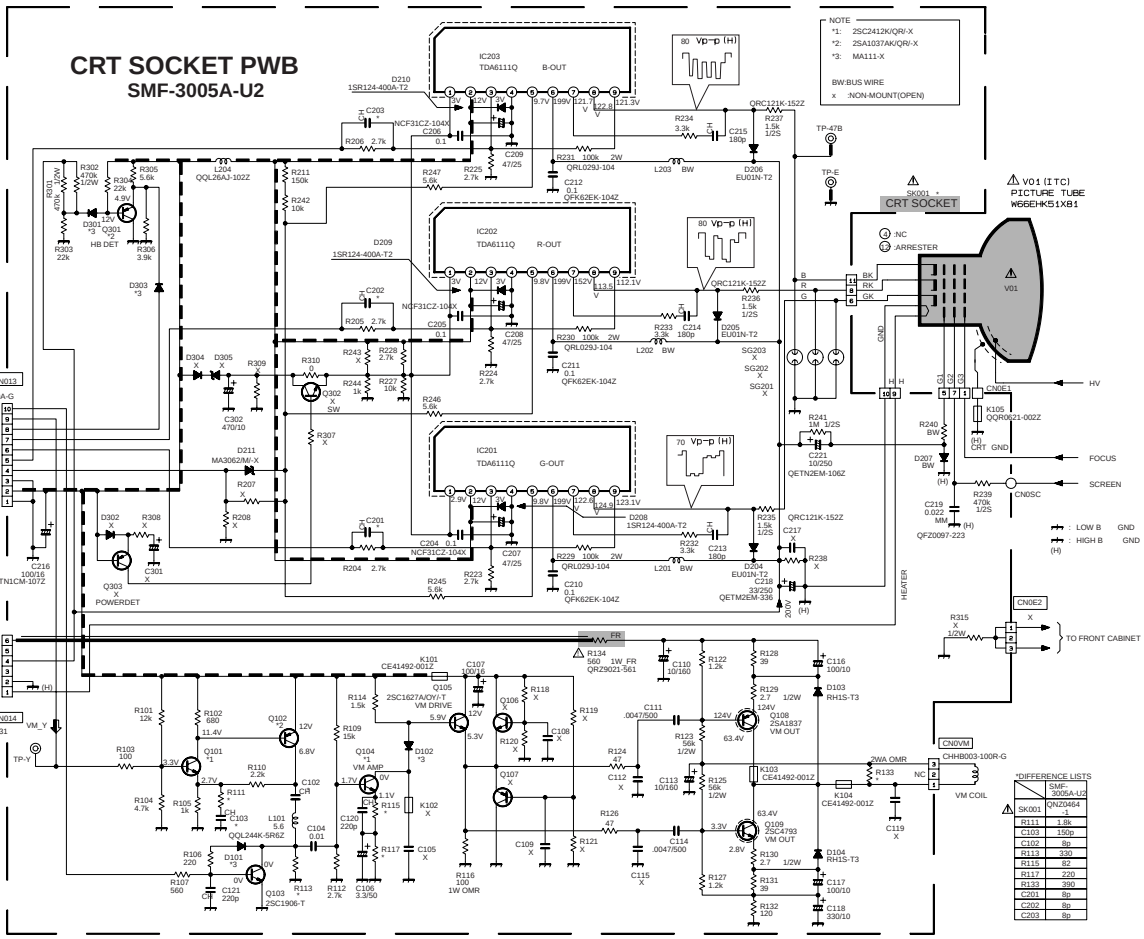

AV28CH1EUS
AV28CH1EUB

AV28CH1EUS
AV28CH1EUB

AV SW PWB CIRCUIT DIAGRAM

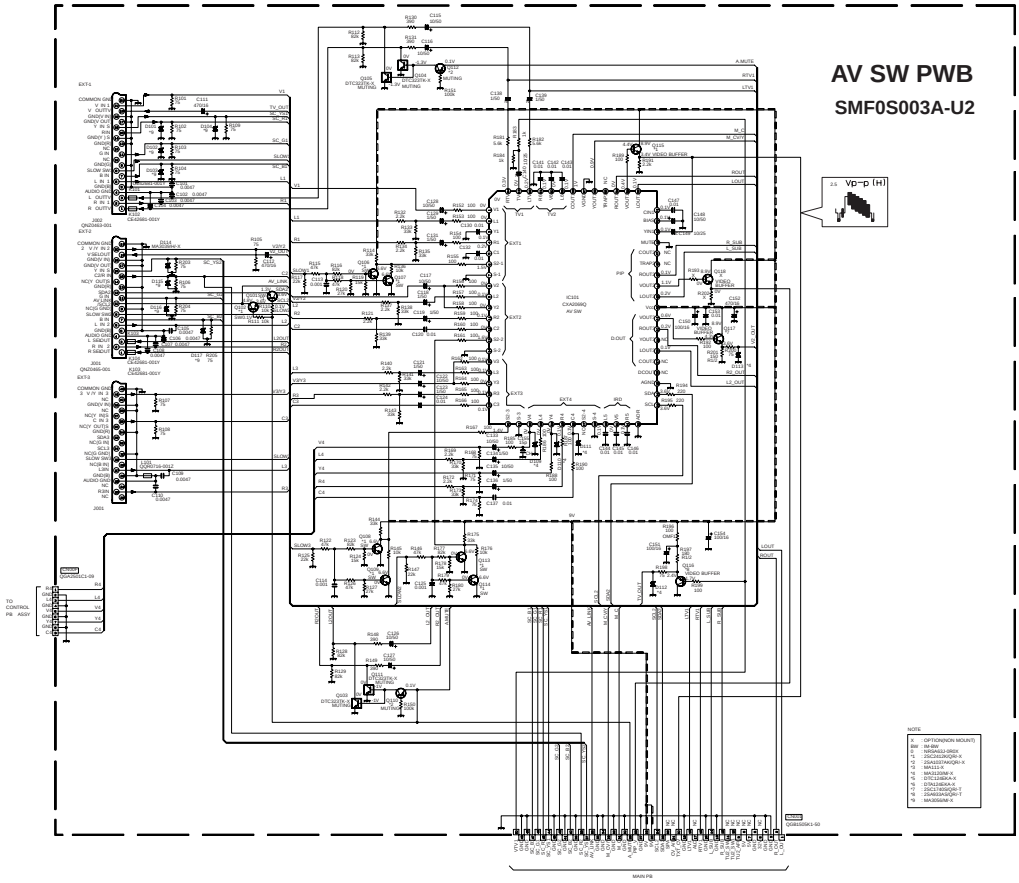

Other ManualsLib Projects

www.manualslib.com

www.manualslib.de

www.manualslib.es

www.manualslib.fr

www.manualslib.nl

www.manualslib.mx

www.manualslib.tech 30+ Languages